Docusign Envelope ID: ABA537FF-B765-8C01-83F2-026BAB54DE63

GSP CONNECTION BRIDGE LOAD RATING TABLE		
CONTROLLING MEMBER	INVENTORY LOAD RATING	OPERATING LOAD RATING
INTERIOR STRINGER	HS 41 (75 TONS US)	HS 69 (125 TONS US)
INTERIOR STRINGER (LRFR)	1.87	2.43

HL-93 LIVE LOADING, LRFR AND HS 20 LIVE LOADING, LFD
INCLUDES FUTURE WEARING COURSE OF 0.020 ksf.

	PROJECT LIMITS		CONTRACT LIMITS
	FROM MP / TO MP		
I-87/I-287 THRUWAY	MP 23.50	MP 23.55	WZTC LIMITS
GSP CONNECTOR	118+00	137+00	WZTC LIMITS

NEW YORK STATE | Thruway Authority

NEW YORK DIVISION

PLANS FOR

SUPERSTRUCTURE REPLACEMENT OF THE GARDEN STATE PARKWAY CONNECTOR BRIDGE

OVER

THRUWAY (I-87/I-287) AT MILE POST 23.53

ROCKLAND COUNTY

TANY 26-23B D215110
118 SHEETS BIN 5514049

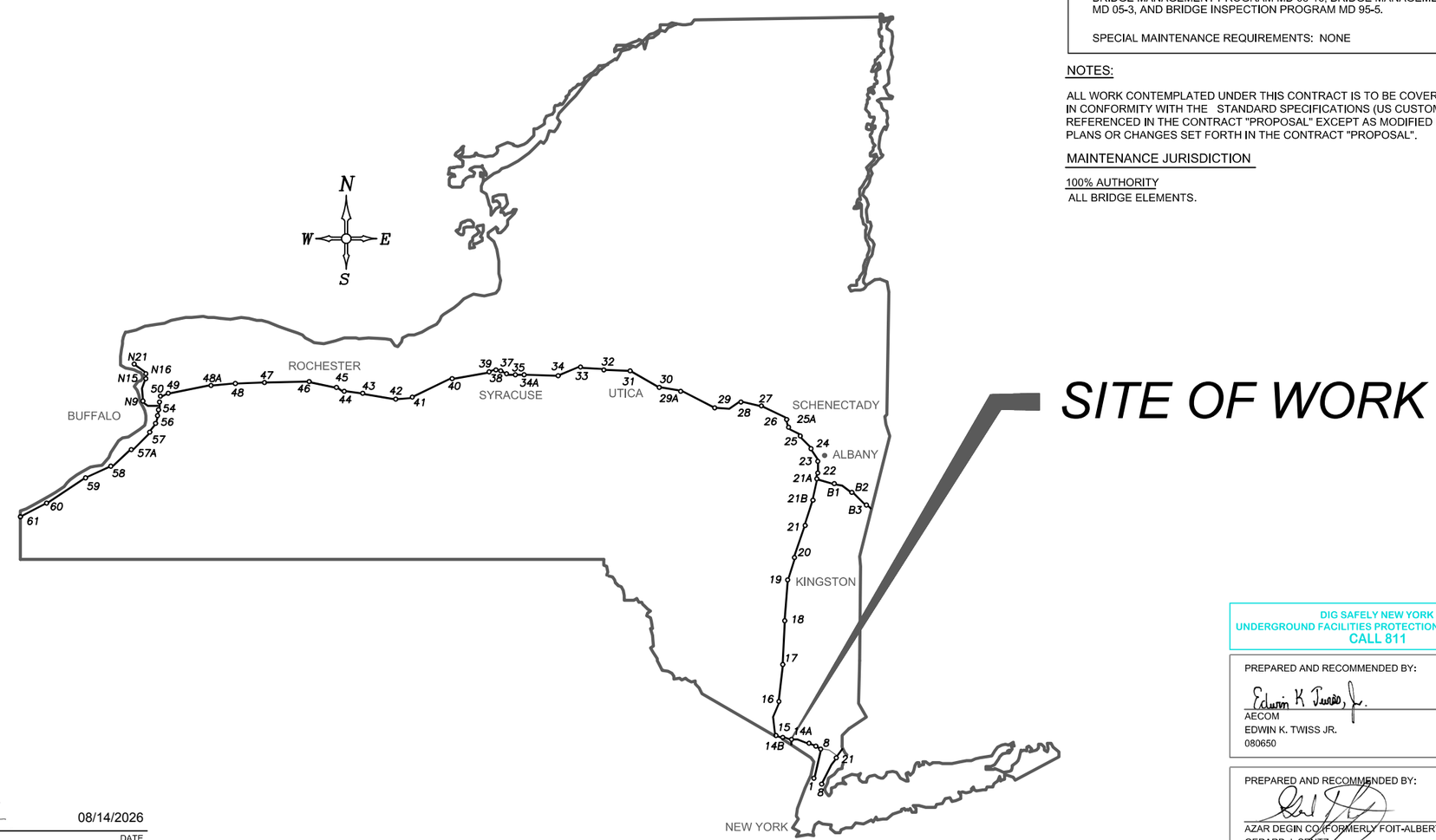

TYPE OF CONSTRUCTION:

BRIDGE REHABILITATION @ MP 23.53, SUPERSTRUCTURE SLAB REPLACEMENT, CONCRETE I-BEAMS REPLACED WITH STEEL GIRDERS, BEARING REPLACEMENT, AND CONCRETE REPAIRS ON EXISTING SUBSTRUCTURE.

STANDARD SHEETS:

THE LATEST REVISIONS OF THE STANDARD SHEETS MAINTAINED BY NYSDOT, WHICH ARE CURRENT AS OF THE STANDARD SPECIFICATIONS ADOPTION DATE SHOWN ON THE PROPOSAL COVER SHALL BE CONSIDERED TO BE IN EFFECT. ALL PAY ITEMS AND WORK CONTAINED IN THE CONTRACT AND ANY ADDITIONAL PAY ITEMS AND WORK ENCOUNTERED DURING THE COURSE OF THE CONTRACT SHALL BE SUBJECT TO THE APPLICABLE STANDARD SHEETS(S) UNLESS OTHERWISE SPECIFIED IN THE CONTRACT DOCUMENTS.

THE LATEST REVISIONS OF THE NYSTA STANDARD SHEETS MAINTAINED BY THE AUTHORITY, WHICH ARE CURRENT ON THE DATE OF ADVERTISEMENT FOR BIDS, SHALL BE CONSIDERED TO BE IN EFFECT. ALL PAY ITEMS AND WORK CONTAINED IN THE CONTRACT AND ANY ADDITIONAL PAY ITEMS AND WORK ENCOUNTERED DURING THE COURSE OF THE CONTRACT SHALL BE SUBJECT TO THE APPLICABLE STANDARD SHEET(S) LISTED ON DWG. SS-1 UNLESS OTHERWISE SPECIFIED IN THE CONTRACT DOCUMENTS.

BRIDGE MAINTENANCE GUIDELINES

UPON COMPLETION OF THIS PROJECT, THE BRIDGE STRUCTURES REPAIRED, REHABILITATED OR RECONSTRUCTED HEREUNDER SHALL BE MAINTAINED IN ACCORDANCE WITH THE CURRENT AASHTO MANUAL FOR BRIDGE MAINTENANCE, AND THE NEW YORK STATE THRUWAY AUTHORITY MAINTENANCE DIRECTIVES:

BRIDGE MANAGEMENT PROGRAM MD 05-16, BRIDGE MANAGEMENT ACTIVITIES MD 05-3, AND BRIDGE INSPECTION PROGRAM MD 95-5.

SPECIAL MAINTENANCE REQUIREMENTS: NONE

NOTES:

ALL WORK CONTEMPLATED UNDER THIS CONTRACT IS TO BE COVERED BY AND IN CONFORMITY WITH THE STANDARD SPECIFICATIONS (US CUSTOMARY) REFERENCED IN THE CONTRACT "PROPOSAL" EXCEPT AS MODIFIED BY THESE PLANS OR CHANGES SET FORTH IN THE CONTRACT "PROPOSAL".

MAINTENANCE JURISDICTION

100% AUTHORITY
ALL BRIDGE ELEMENTS.

DIG SAFELY NEW YORK
UNDERGROUND FACILITIES PROTECTION ORGANIZATION
CALL 811

PREPARED AND RECOMMENDED BY:
Edwin K. Twiss, Jr. DATE 08/13/2026
AECOM
EDWIN K. TWISS JR.
080650
AECOM

PREPARED AND RECOMMENDED BY:
DATE 08/13/2026
AZAR DEGIN CO (FORMERLY FOIT-ALBERT ASSOCIATES)
GERARD J. SENTZ
062576
AZAR DESIGN CO
FORMERLY FOIT-ALBERT ASSOCIATES

CONTRACTOR'S NAME: .....
AWARD DATE:
COMPLETION DATE: .....
FINAL ACCEPTANCE DATE: .....
INSPECTION FIRM'S NAME: .....
RESIDENT ENG./EIC: .....
FINAL COST TOTAL: .....

FISCAL SHARE	COST(S)

INSPECTION FIRM CONSULTANT STAMP:

RECOMMENDED BY: DocuSigned by: 08/14/2026
DIRECTOR, OFFICE OF DESIGN — DATE
96911BB0CE9E4EB...

RECOMMENDED BY: Signed by: Thomas Feely 08/17/2026
DIVISION DIRECTOR — DATE
110BC212E0184A9...

RECOMMENDED BY: Signed by: Rochelle Hosley 08/17/2026
TRAFFIC ENGINEER — DATE
A7201EA3D452495...

RECOMMENDED BY: DocuSigned by: Charles Whetstone 08/13/2026
DIRECTOR, OFFICE OF CONSTRUCTION MANAGEMENT — DATE
4BC1093E37334B1...

RECOMMENDED BY: Signed by: Kevin Wisely 08/17/2026
CHIEF MAINTENANCE AND OPERATIONS OFFICER — DATE
535D05A3AB80460...

APPROVED BY: DocuSigned by: 08/17/2026
CHIEF ENGINEER — DATE
381E8D8499844A7...

REVIEWED BY

PROJECT MANAGER

BUREAU DIRECTOR

Sheet No.	Drawing No.	Drawing Title
1	COVER	COVER
2	INDEX	INDEX
3	ABR_01	ABBREVIATIONS
4	LEG-01	LEGEND (1 OF 2)
5	LEG-02	LEGEND (2 OF 2)
6	SS-01	TABLE OF STANDARD SHEETS
7	TYP-01	TYPICAL HIGHWAY SECTIONS
8	TYP-02	TYPICAL APPROACH SECTIONS (SHEETS 1 OF 2)
9	TYP-03	TYPICAL APPROACH SECTIONS (SHEETS 2 OF 2)
10	WZN-01	TEMPORARY TRAFFIC CONTROL NOTES
11	WZS-01	WORK ZONE SIGN TABLE
12	WZTC-01	PRE-STAGE 1 WORK ZONE TRAFFIC CONTROL PLAN
13	WZTC-02	PRE-STAGE 1 WORK ZONE TRAFFIC CONTROL PLAN
14	WZTC-03	PRE-STAGE 1 WORK ZONE TRAFFIC CONTROL PLAN
15	WZTC-04	PRE-STAGE 1 WORK ZONE TRAFFIC CONTROL PLAN
16	WZTC-05	PRE-STAGE 2 WORK ZONE TRAFFIC CONTROL PLAN
17	WZTC-06	PRE-STAGE 2 WORK ZONE TRAFFIC CONTROL PLAN
18	WZTC-07	PRE-STAGE 2 WORK ZONE TRAFFIC CONTROL PLAN
19	WZTC-08	PRE-STAGE 2 WORK ZONE TRAFFIC CONTROL PLAN
20	WZTC-09	STAGE 1 WORK ZONE TRAFFIC CONTROL PLAN
21	WZTC-10	STAGE 1 WORK ZONE TRAFFIC CONTROL PLAN
22	WZTC-11	STAGE 1 WORK ZONE TRAFFIC CONTROL PLAN
23	WZTC-12	STAGE 1 WORK ZONE TRAFFIC CONTROL PLAN
24	WZTC-13	STAGE 2 WORK ZONE TRAFFIC CONTROL PLAN
25	WZTC-14	STAGE 2 WORK ZONE TRAFFIC CONTROL PLAN
26	WZTC-15	STAGE 2 WORK ZONE TRAFFIC CONTROL PLAN
27	WZTC-16	STAGE 2 WORK ZONE TRAFFIC CONTROL PLAN
28	WZTC-17	STAGE 3 WORK ZONE TRAFFIC CONTROL PLAN
29	WZTC-18	STAGE 3 WORK ZONE TRAFFIC CONTROL PLAN
30	WZTC-19	STAGE 3 WORK ZONE TRAFFIC CONTROL PLAN
31	WZTC-20	STAGE 3 WORK ZONE TRAFFIC CONTROL PLAN
32	WZTC-21	POST-STAGE WORK ZONE TRAFFIC CONTROL PLAN
33	WZTC-22	POST-STAGE WORK ZONE TRAFFIC CONTROL PLAN
34	WZTC-23	POST-STAGE WORK ZONE TRAFFIC CONTROL PLAN
35	WZTC-24	POST-STAGE WORK ZONE TRAFFIC CONTROL PLAN
36	BLT-01	BASELINE TIES
37	MJ-01	MAINTENANCE JURISDICTION
38	MIS-01	MISCELLANEOUS TABLES
39	MDS-01	MISCELANEOUS DETAILS
40	ESS-01	EARTHWORK SUMMARY SHEET
41	ESN-01	EROSION AND SEDIMENT CONTROL DETAILS
42	GEN-01	GENERAL PLAN
43	GEN-02	GENERAL PLAN
44	GEN-03	GENERAL PLAN
45	GEN-04	GENERAL PLAN
46	PMP-01	PAVEMENT MARKING PLAN
47	PMP-02	PAVEMENT MARKING PLAN
48	PMP-03	PAVEMENT MARKING PLAN
49	PMP-04	PAVEMENT MARKING PLAN
50	SDT-01	SIGN DATA TABLE
51	ST-01	EXISTING PLAN AND ELEVATION
52	ST-02	PROPOSED PLAN AND ELEVATION
53	ST-03	TYPICAL APPROACH SECTIONS
54	ST-04	TYPICAL BRIDGE SECTIONS
55	ST-05	STAGING SECTIONS (1 OF 3)
56	ST-06	STAGING SECTIONS (2 OF 3)
57	ST-07	STAGING SECTIONS (3 OF 3)
58	ST-08	BRIDGE PROFILE
59	ST-09	GENERAL NOTES
60	ST-10	EXCAVATION AND EMBANKMENT PLAN

Sheet No.	Drawing No.	Drawing Title
61	ST-11	EXCAVATION AND EMBANKMENT SECTIONS (1 OF 2)
62	ST-12	EXCAVATION AND EMBANKMENT SECTIONS (2 OF 2)
63	ST-13	BEGIN ABUTMENT REMOVAL PLAN & ELEVATION
64	ST-14	BEGIN ABUTMENT REPAIR PLAN & ELEVATION
65	ST-15	BEGIN ABUTMENT REINFORCMENT DETAILS
66	ST-16	BEGIN ABUTMENT SECTIONS
67	ST-17	END ABUTMENT REMOVAL PLAN & ELEVATION
68	ST-18	END ABUTMENT REPAIR PLAN & ELEVATION
69	ST-19	END ABUTMENT REINFORCMENT DETAILS
70	ST-20	END ABUTMENT SECTIONS
71	ST-21	PIER 1 REPAIR PLAN & ELEVATION (1 OF 2)
72	ST-22	PIER 1 REPAIR PLAN & ELEVATION (2 OF 2)
73	ST-23	PIER 1 REINFORCEMENT DETAILS
74	ST-24	PIER 2 REPAIR PLAN & ELEVATION (1 OF 2)
75	ST-25	PIER 2 REPAIR PLAN & ELEVATION (2 OF 2)
76	ST-26	PIER 2 REINFORCEMENT DETAILS
77	ST-27	PIER 3 REPAIR PLAN & ELEVATION (1 OF 2)
78	ST-28	PIER 3 REPAIR PLAN & ELEVATION (2 OF 2)
79	ST-29	PIER 3 REINFORCEMENT DETAILS
80	ST-30	SUBSTRUCTURE MISCELLANEOUS DETAILS (1 OF 2)
81	ST-31	SUBSTRUCTURE MISCELLANEOUS DETAILS (2 OF 2)
82	ST-32	CONCRETE REPAIR DETAILS
83	ST-33	BEARING DETAILS (1 OF 2)
84	ST-34	BEARING DETAILS (2 OF 2)
85	ST-35	TRANSVERSE SECTION (1 OF 2)
86	ST-36	TRANSVERSE SECTION (1 OF 2)
87	ST-37	FRAMING PLAN
88	ST-38	GIRDER ELEVATION
89	ST-39	STEEL DETAILS (1 OF 2)
90	ST-40	STEEL DETAILS (2 OF 2)
91	ST-41	MOMENT, SHEAR, & DESIGN LOAD TABLES
92	ST-42	CAMBER TABLES
93	ST-43	HAUNCH TABLE
94	ST-44	SUPERSTRUCTURE SLAB REINFORCEMENT PLAN (1 OF 2)
95	ST-45	SUPERSTRUCTURE SLAB REINFORCEMENT PLAN (2 OF 2)
96	ST-46	SLAB POUR SEQUENCE
97	ST-47	APPROACH SLAB DETAILS (1 OF 2)
98	ST-48	APPROACH SLAB DETAILS (2 OF 2)
99	ST-49	SLEEPER SLAB DETAILS
100	ST-50	ARMORLESS JOINT DETAILS
101	ST-51	CONCRETE BARRIER TRANSITION RAILING, AND DRAINAGE LAYOUT PLAN
102	ST-52	APPROACH DRAINAGE DETAILS
103	ST-53	SINGLE SLOPE CONCRETE BARRIER REINFORCMENT PLAN
104	ST-54	SINGLE SLOPE CONCRETE BARRIER DETAILS
105	ST-55	SINGLE SLOPE CONCRETE MEDIAN BARRIER DETAILS
106	ST-56	BRIDGE RAIL TRANSISTION DETAILS (1 OF 4)
107	ST-57	BRIDGE RAIL TRANSISTION DETAILS (2 OF 4)
108	ST-58	BRIDGE RAIL TRANSISTION DETAILS (3 OF 4)
109	ST-59	BRIDGE RAIL TRANSISTION DETAILS (4 OF 4)
110	ST-60	PROTECTIVE SCREENING DETAILS
111	ST-61	MISCELLANEOUS DETAILS (1 OF 2)
112	ST-62	MISCELLANEOUS DETAILS (2 OF 2)
113	ST-63	BAR BENDING DIAGRAM
114	ST-64	BAR LIST (1 OF 5)
115	ST-65	BAR LIST (2 OF 5)
116	ST-66	BAR LIST (3 OF 5)
117	ST-67	BAR LIST (4 OF 5)
118	ST-68	BAR LIST (5 OF 5)

IT IS A VIOLATION OF LAW FOR ANY PERSON, UNLESS THEY ARE ACTING UNDER THE DIRECTION OF A LICENSED PROFESSIONAL ENGINEER, ARCHITECT, LANDSCAPE ARCHITECT, OR LAND SURVEYOR, TO ALTER AN ITEM IN ANY WAY. IF AN ITEM BEARING THE STAMP OF A LICENSED PROFESSIONAL IS ALTERED, THE ALTERING ENGINEER, ARCHITECT, LANDSCAPE ARCHITECT, OR LAND SURVEYOR SHALL STAMP THE DOCUMENT AND INCLUDE THE NOTATION "ALTERED BY" FOLLOWED BY THEIR SIGNATURE, THE DATE OF SUCH ALTERATION, AND A SPECIFIC DESCRIPTION OF THE ALTERATION.

REVISIONS

DATE	DESCRIPTION	BY	SYM.

NEW YORK STATE | Thruway Authority

AECOM

TITLE OF PROJECT
SUPERSTRUCTURE REPLACEMENT
GSP CONNECTOR OVER NYS THRUWAY

LOCATION OF PROJECT
BIN 5514049 (MP 23.53)

TITLE OF DRAWING
INDEX

CONTRACT NUMBER:
TANY 26-23B

DATE:
JULY 2026

DRAWING NUMBER:
INDEX

DESIGN SUPERVISOR: RWL | DESIGNED BY: IW / MR / VZ | CHECKED BY: IW / MR / VZ | DRAFTED BY: AICE | CHECKED BY: AICE

ALIGNMENT

ABBR.	DESCRIPTION
AH	AHEAD
AZ	AZIMUTH
BK	BACK
℄	BASELINE
BRG	BEARING
℄	CENTERLINE
CS	CURVE TO SPIRAL
e	SUPERELEVATION RATE (CROSS SLOPE)
EQ	EQUALITY
EXT	EXTERNAL
HCL	HORIZONTAL CONTROL LINE
HSD	HEADLIGHT SIGHT DISTANCE
L	LENGTH OF CIRCULAR CURVE
LS	LENGTH OF SPIRAL
LVC	LENGTH OF VERTICAL CURVE
E	CENTER CORRECTION OF VERTICAL CURVE
ML	MAIN LINE
PC	POINT OF CURVATURE
PI	POINT OF INTERSECTION
POL	POINT ON LINE
PSD	PASSING SIGHT DISTANCE
PT	POINT OF TANGENT
PVC	POINT OF VERTICAL CURVE
PVI	POINT OF VERTICAL INTERSECTION
PVT	POINT OF VERTICAL TANGENT
R	RADIUS
SC	SPIRAL TO CURVE
SSD	STOPPING SIGHT DISTANCE
ST	SPIRAL TO TANGENT
STA	STATION
T	TANGENT LENGTH
TGL	THEORETICAL GRADE LINE
TS	TANGENT TO SPIRAL
VC	VERTICAL CURVE

TOPOGRAPHY (DRAINAGE)

ABBR.	DESCRIPTION
BB	BOTTOM OF BANK (STREAM)
BC	BOTTOM OF CURB
BO	BOTTOM OF OPENING
CAP	CORRUGATED ALUMINUM PIPE
CB	CATCH BASIN
CIP	CAST IRON PIPE
℄ STRM	CENTERLINE OF STREAM
CMP	CORRUGATED METAL PIPE
CP	CONCRETE PIPE
CSP	CORRUGATED STEEL PIPE
CULV	CULVERT
DIA	DIAMETER
DMH	DRAINAGE MANHOLE
DS	DRAINAGE STRUCTURE PIPE
D'XING	DITCH CROSSING
EHW	EXTREME HIGH WATER
EL	ELEVATION
ELEV	ELEVATION
ELW	EXTREME LOW WATER
ES	END SECTION
HW	HEADWALL
INV	INVERT
MH	MANHOLE
MHW	MEAN HIGH WATER
OHW	ORDINARY HIGH WATER
OLW	ORDINARY LOW WATER
RCP	REINFORCED CONCRETE PIPE
SICPP	SMOOTH INTERIOR CORRUGATED POLYETHYLENE PIPE
TB	TOP OF BANK (STREAM)
TC	TOP OF CURB
TG	TOP OF GRATE
VCP	VITRIFIED CLAY PIPE

TOPOGRAPHY (MISCELLANEOUS)

ABBR.	DESCRIPTION
ABUT	ABUTMENT
AOBE	AS ORDERED BY ENGINEER
ASPH	ASPHALT
BDY	BOUNDARY
BLDG	BUILDING
BM	BENCH MARK
CC	CENTER TO CENTER
CONC	CONCRETE
CONST	CONSTRUCTION
CR	COUNTY ROAD
D	DEED DISTANCE
DM	DIRECT MEASUREMENT
DWY	DRIVEWAY
EP	EDGE OF PAVEMENT
ES	EDGE OF SHOULDER
FEE	FEE ACQUISITION
FEE WO/A	FEE ACQUISITION WITHOUT ACCESS
FP	FENCE POST
FD	FOUNDATION
FL	FENCE LINE
GAR	GARAGE
GR	GRAVEL
HO	HOUSE
HWY	HIGHWAY
IP	IRON PIN OR IRON PIPE
MB	MAILBOX
MON	MONUMENT
N&W	NAIL AND WASHER
OG	ORIGINAL GROUND
O/H	OVERHEAD
P	PARCEL
PAV'T	PAVEMENT
PE	PERMANENT EASEMENT
PED POLE	PEDESTRIAN POLE
PL	PROPERTY LINE
POR	PORCH
RR	RAILROAD
RTE	ROUTE
ROW	RIGHT OF WAY
RW	RETAINING WALL
SH	STATE HIGHWAY
SHLDR	SHOULDER
SPK	SPIKE
ST	STREET
STK	STAKE
STY	STORY
SW	SIDEWALK
TE	TEMPORARY EASEMENT
TO	TEMPORARY OCCUPANCY
U/G	UNDERGROUND
WW	WING WALL

UTILITIES

ABBR.	DESCRIPTION
E	ELECTRIC
EMH	ELECTRIC MANHOLE
G	GAS
GP	GUY POLE
GSB	GAS SERVICE BOX (HOUSE LINE)
GV	GAS VALVE (MAIN LINE)
HYD	HYDRANT
LP	LIGHT POLE
LPG	LOW PRESSURE GAS
PP	POWER POLE
SA	SANITARY SEWER
SMH	SANITARY MANHOLE
ST	STORM SEWER
T	TELEPHONE
TCB	TRAFFIC CONTROL BOX
TELBOX	TELEPHONE BOX
TEL P	TELEPHONE POLE
TMH	TELEPHONE MANHOLE
CTV	CABLE TELEVISION
W	WATER
WSB	WATER SERVICE BOX (HOUSE LINE)
WV	WATER VALVE (MAIN LINE)

SUBSURFACE EXPLORATION

ABBR.	DESCRIPTION
REPLACE ABBREVIATION "AB" WITH:	
AH	HAND AUGER
CP	CONE PENTROMETER
DA	2¼ INCHES CASED DRILL HOLE
DM	DRILLING MUD
DN	4 INCHES CASED DRILL HOLE
FH	HOLLOW FLIGHT AUGER
PA	POWER AUGER
PH	PROBE
PT	PERCOLATION TEST HOLE
RP	1 INCH SAMPLER (RETRACTABLE PLUG)
	TO BE DEFINED AT THE TIME OF EXPLORATION
SP	SEISMIC POINT
TP	TEST PIT
ABBREVIATION "C" IN CATEGORIES: DA, DM, DN, AND FH WITH:	
B	BRIDGE
C	CUT
D	DAM
F	FILL
K	CULVERT
W	WALL
X	TO BE USED IF ONE OF THE ABOVE CANNOT BE DEFINED AT THE TIME THE EXPLORATION IS MADE

STANDARD SYMBOL (PLANS)	ITEM PAYMENT UNIT: ESTIMATE OF QUANTITIES SHEET	EQUIVALENT NOMENCLATURE: (SPECS/PROPOSAL)
"	-	INCHES
'	LF	LINEAR FEET
mi	MI	MILES
ft^2	SF	SQUARE FEET
YD^2	SY	SQUARE YARD
AC	AC	ACRES
YD^3	CY	CUBIC YARD
GAL	GAL	GALLON
lb	LB	POUND
TON	TON	TON

REVISIONS

DATE	DESCRIPTION	BY	SYM.

NEW YORK STATE | Thruway Authority

AECOM

TITLE OF PROJECT
SUPERSTRUCTURE REPLACEMENT
GSP CONNECTOR OVER NYS THRUWAY

LOCATION OF PROJECT
BIN 5514049 (MP 23.53)

TITLE OF DRAWING
ABBREVIATIONS

CONTRACT NUMBER: TANY 26-23B

DATE: JULY 2026

DRAWING NUMBER: ABR-01

DESIGN SUPERVISOR: RWL
DESIGNED BY: IW / MR / VZ
CHECKED BY: IW / MR / VZ
DRAFTED BY: AJCE
CHECKED BY: AJCE

ALIGNMENT

STYLE	NAME	DESCRIPTION
	AC	CONTROL (CENTERLINE)
	AD_P	DETOUR
	AT_P	TRANSITION CONTROL

BRIDGE

STYLE	NAME	DESCRIPTION
	BR	RAIL
	BSHT	SHEET PILING

CONTROL

STYLE	NAME	DESCRIPTION
℄ ℄	CB	BASELINE
	CBPR	BASELINE, PROJECTION

DRAINAGE

STYLE	NAME	DESCRIPTION
ST	DCP	CULVERT PIPE
ST	DCP_P	CULVERT PIPE (DIR)
	DDG_P	DITCH, GRASS LINED
	DDP_P	DITCH, PAVED INVERT
	DDS_P	DITCH, STONE LINED
	DFL_P	FLOW LINE
	DSSD	SLOTTED DRAIN
UD	DUD_P	UNDERDRAIN

ENVIRONMENTAL

STYLE	NAME	DESCRIPTION
FL	EBLHS	BALE, STRAW
	ECT	CURTAIN, TURBIDITY
	EDMC	DAM, COFFER
	EDMEC_P	DAM, EARTHEN CHECK
	EDMGSC_P	DAM, GRAVEL BAG/SAND BAG CHECK
	EDMPC_P	DAM, PREFABRICATED CHECK
	EDMSC_P	DAM, STONE CHECK
	EFNS	FENCE, SILT
	EFNSV	FENCE, SILT & VEGETATION
	EFNV	FENCE, VEGETATION
AA	EWAA_P	WETLAND, ADJACENT AREA
FW	EWF	WETLAND, FEDERAL
FW SW	EWFS	WETLAND, FEDERAL AND STATE
WM	EWM	WETLAND, MITIGATION AREA
SW	EWS	WETLAND, STATE

LANDSCAPE

STYLE	NAME	DESCRIPTION
	LABL	AREA, BRUSH LINE
	LAHR	AREA, HEDGE ROW
	LAPB	AREA, PLANTING BED
	LAWA	AREA, WOODED AREA OUTLINE
	LAWE	AREA, WATERS EDGE
	LCUT_P	CUT LIMIT
	LFILL_P	FILL LIMIT
	LFNC	FENCE
	LTRC	TREE ROW, CONIFEROUS
	LTRD	TREE ROW, DECIDUOUS
	LWH	WALL, H PILE
	LWR	WALL, RETAINING
	LWS	WALL, STONE

ROW MAPPING

STYLE	NAME	DESCRIPTION
	MDL	DEED LINE
PE	MEE	EASEMENT, EXISTING
PE	MEP_P	EASEMENT, PERMANENT
APE	MEPA_P	EASEMENT, PERMANENT, APPROX.
TE	MET_P	EASEMENT, TEMPORARY
ATE	META_P	EASEMENT. TEMPORARY, APPROX.
FEE	MF_P	FEE ACQUISITION, W/ ACCESS
AFEE	MFA_P	FEE ACQUISITION, APPROXIMATE
	MFS_P	FEE ACQUISITION, SHAPE
	MFWOA_P	FEE ACQUISITION, W/O ACCESS
	MHA	HISTORICAL, ACQUISITION
HB	MHB	HIGHWAY BOUNDARY
AHB	MHBA	HIGHWAY BOUNDARY, APPROX.
	MHBW	HWY BOUNDARY, FACE OF WALL
HB W/OA	MHBWOA	HIGHWAY BOUNDARY, W/O ACCESS
	MJC	JURISDICTION, CITY
	MJCY	JURISDICTION, COUNTY
	MJHD	JURISDICTION, HISTORIC DISTRICT
	MJLL	JURIS., (GREAT, MILITARY) LOT LINE
	MJN	JURISDICTION, NATION
	MJPB	JURISDICTION, PUBLIC LANDS
	MJS	JURISDICTION, STATE
	MJT	JURISDICTION, TOWN
	MJV	JURISDICTION, VILLAGE
PL	MPL	PROPERTY LOT LINE
APL	MPLA	PROPERTY LOT LINE, APPROXIMATE
Z	MSL	SUB LOT LINE

ROADWAY

STYLE	NAME	DESCRIPTION
	RCZ_P	CLEAR ZONE
	RG	GUIDE RAIL, MISCELLANEOUS
	RGB	GUIDE RAIL, BOX BEAM
	RGBM	GUIDE RAIL, BOX BEAM, MEDIAN
	RGC	GUIDE RAIL, CABLE
	RGCB	GUIDE RAIL, CONCRETE BARRIER
	RGP_P	GUIDE POST
	RGW	GUIDE RAIL, W BEAM
	RGWM	GUIDE RAIL, W BEAM, MEDIAN
	RPB	PARKING BUMPER
	RRC	RAIL ROAD, CATENARY
3R	RRER	RAIL ROAD, 3RD RAIL
3R	RRPLS_P	RAIL, PHOTO, LARGE SCALE
	RRPSS	RAIL, PHOTO, SMALL SCALE
	RRS	RUMBLE STRIP
	RRSLS_P	RAIL, SURVEY, LARGE SCALE
	RRSSS	RAIL, SURVEY, SMALL SCALE

SIGNS

STYLE	NAME	DESCRIPTION
	SBLB	BILLBOARDS
	SM	MULTIPLE POST
	SSO	STRUCTURE, OVERHEAD
	SSOC	STRUCTURE, OVHD. CANTILEVER

STRIPING

STYLE	NAME	DESCRIPTION
	STB*	BROKEN LINE
	STDB*	DOUBLE BROKEN LINE
	STDL*	DOTTED LINE LONG
	STDS*	DOTTED LINE SHORT
	STFB*	FULL BARRIER LINE
	STH*	HATCH LINE
	STPB*	PARTIAL BARRIER LINE
	STRCT	ROUNDABOUT, CAT TRACKS
	STRYL	ROUNDABOUT, YIELD LINE
	STSB	STOP BAR
	STSE*	SOLID, EDGE
	STXL	X WALK, LADDER LINE
	STXLB	X WALK, LADDER BAR LINE

* = W (WHITE) OR Y (YELLOW)

TRAFFIC CONTROL

STYLE	NAME	DESCRIPTION
	TCSW	SIGNAL, SPAN WIRE

TRAFFIC WORK ZONE

STYLE	NAME	DESCRIPTION
	TWZBT_P	BARRIER, TEMPORARY
	TWZBTWL_P	BARRIER, TEMPORARY, W/ WARNING LIGHTS
	TWZCD_P	CHANNELIZING DEVICE
	TWZPMRC_P	PAVEMENT MARKING REMOVAL OR COVERING

UTILITIES

STYLE	NAME	DESCRIPTION
C	UC	CONDUIT, UNDERGROUND
]C[	UCH	CONDUIT, HANGING
OC	UCO	CONDUIT, OVERHEAD
E	UE	ELECTRIC LINE, UNDERGROUND
]E[	UEH	ELECTRIC LINE, HANGING
OE	UEO	ELECTRIC LINE, OVERHEAD
OET	UETO	ELECTRIC TRANSMISSION, OVERHEAD
	UESS	ELECTRIC, SUBSTATIONS
FO	UFO	FIBER OPTIC, UNDERGROUND
]FO[	UFOH	FIBER OPTIC, HANGING
OFO	UFOO	FIBER OPTIC, OVERHEAD
G	UG	GAS, UNDERGROUND
]G[	UGH	GAS, HANGING
OG	UGO	GAS, OVERHEAD
IC	UIC	INFORM CABLE, UNDERGROUND
]IC[	UICH	INFORM CABLE, HANGING
O	UO	OIL LINE, UNDERGROUND
]O[	UOH	OIL LINE, HANGING
	UPBP	POLE, BRACE, PUSH BRACE
	UPGW	POLE, GUY WIRE
SA	USA	SANITARY SEWER, UNDERGROUND
]SA[	USAH	SANITARY SEWER, HANGING
SAF	USAF	SANITARY SEWER, FORCE MAIN, UGND
]SAF[	USAFH	SANITARY SEWER, FORCE MAIN, HANG
T	UT	TELEPHONE, UNDERGROUND
]T[	UTH	TELEPHONE, HANGING
OT	UTO	TELEPHONE, OVERHEAD
CTV	UTV	CABLE TV, UNDERGROUND
]CTV[	UTVH	CABLE TV, HANGING
OCTV	UTVO	CABLE TV, OVERHEAD
UU	UUU	UNKNOWN, UNDERGROUND
]UU[	UUH	UNKNOWN, HANGING
OUU	UUO	UNKNOWN, OVERHEAD
W	UW	WATER LINE, UNDERGROUND
]W[	UWH	WATER LINE, HANGING
OW	UWO	WATER LINE, OVERHEAD

1. THE LEGEND ILLUSTRATES MAPPING FEATURES (EXISTING AND PROPOSED).
2. FEATURES ARE SHOWN AS EITHER LINEAR (ROADWAY GUIDERAIL, ROADWAY SIDEWALK, UTILITY LINES, ETC.) OR POINT (SIGN, UTILITY POLE, ETC.).
3. FEATURES SHOWN ON THE LEGEND AS EXISTING FEATURES ALSO HAVE CORRESPONDING PROPOSED FEATURES.
4. PROPOSED FEATURE SYMBOLOGY IS IDENTICAL TO EXISTING FEATURE SYMBOLOGY EXCLUDING LINE WEIGHT. LINE WEIGHT FOR PROPOSED FEATURES IS THICKER (0.015 in ON B SIZE DRAWINGS).
5. MAPPING FEATURES NOT INCLUDED ON THE LEGEND SHEET DO NOT HAVE A UNIQUE SYMBOLOGY (SUCH AS THE PAVEMENT EDGE, PAVEMENT EDGE OF TRAVEL WAY) AND SHOULD BE LABELED ON THE PLANS.
6. FEATURES SHOWN AT THE HEAVIER WEIGHT ARE PROPOSED ONLY AND DO NOT HAVE CORRESPONDING EXISTING FEATURES.

REVISIONS

DATE	DESCRIPTION	BY	SYM.

NEW YORK STATE | Thruway Authority

AECOM

TITLE OF PROJECT: SUPERSTRUCTURE REPLACEMENT GSP CONNECTOR OVER NYS THRUWAY

LOCATION OF PROJECT: BIN 5514049 (MP 23.53)

TITLE OF DRAWING: LEGENDS (1 OF 2)

CONTRACT NUMBER: TANY 26-23B

DATE: JULY 2026

DRAWING NUMBER: LEG-01

DESIGN SUPERVISOR: RWL | DESIGNED BY: IW / MR / VZ | DRAFTED BY: AJCE | CHECKED BY: IW / MR / VZ | CHECKED BY: AJCE

ALIGNMENT

CELL	NAME	DESCRIPTION
	ACC	CENTER OF CURVATURE
	ACOGO	COGO
	ACS	CURVE TO SPIRAL
	ADPI_P	DETOUR, POINT OF INTERSECT.
	ADPL_P	DETOUR, POINT ON LINE
	AEQN	EQUATION
	AEQNAHD	EQUATION AHEAD
	AEQNBK	EQUATION BACK
	AEVT	EVENT STATION
	APC	POINT OF CURVATURE
	APCC	POINT OF COMPOUND CURVATURE
	API	POINT OF INTERSECTION
	APOB	POINT OF BEGINNING
	APOC	POINT OF CURVATURE
	APOE	POINT OF END
	APOL	POINT ON LINE
	APOS	POINT ON SPIRAL
	APOT	POINT ON TANGENT
	APOVC	POINT ON VERTICAL CURVE
	APOVT	POINT ON VERTICAL TANGENT
	APORC	POINT ON REVERSE CURVE
	APT	POINT OF TANGENCY
	APVC	POINT OF VERTICAL CURVATURE
	APVCC	POINT OF VERT. CMPND CURVE
	APVI	POINT OF VERT. INTERSECTION
	APVRC	POINT OF VERT. REVERSE CURVE
	APVT	POINT OF VERTICAL TANGENCY
	ASC	SPIRAL TO CURVE
	ASPI	SPIRAL POINT OF INTERSECTION
	ASTS	SPIRAL TO SPIRAL
	AST	SPIRAL TO TANGENT
	ATS	TANGENT TO SPIRAL
	AVEVT	VERTICAL EVENT POINT
	AVHIGH	VERTICAL HIGH POINT
	AVLOW	VERTICAL LOW POINT

BRIDGE

	BSC	BRIDGE, SCUPPER

CONTROL

	CBP	BASELINE, POINT
	CBPOL	BASELINE, POINT ON LINE
	CBSP	BASELINE, SPUR POINT
	CBTP	BASELINE, TIE POINT
	CPBM	BENCHMARK
	CPH	POINT, HORIZ. PHOTOGRAMMETRY
	CPSM	POINT, SURVEY MARKER, PERM.
	CPSV	POINT, VERT., PHOTOGRAMMETRY

DRAINAGE

CELL	NAME	DESCRIPTION
	DINV	INVERT
	DS	STRUCTURE, RECTANGULAR
	DSI	STRUCTURE, INVERT
	DSM	STRUCTURE, MANHOLE
	DSMTXX_P	STRUCTURE, MANHOLE, TYPE "XX" "XX" = 48, 60, 72, 96
	DSR	STRUCTURE, ROUND
	DST"X"CB P	STRUCTURE, RECT., WITH CURB TYPE "X" "X" = F, G, N, O, P, R
	DST"X" P	STRUCTURE, RECT., TYPE "X" "X" = I, K, L, M, O, P, U

ENVIRONMENTAL

CELL	NAME	DESCRIPTION
CULV	EIOP_P	STR., INLET, OUTLET PROT.
GB	EIPGB_P	STR., INLET PROT., GRAVEL BAG
H/S	EIPHS_P	STR., INLET PROT., HAY/STRAW
PRFB	EIPP_P	STR., INLET PROT., PREFAB.
SF	EIPSF_P	STR., INLET PROT., SILT FENCE
	ERCB	RISER, CONCRETE BOX
	ETRS_P	TRAP, SEDIMENT
	EWFG	WETLAND FLAG

GEOTECHNICAL

	GDH	DRILL HOLE

LANDSCAPE

	LELS	ELEVATION, SPOT
	LFP	FLAG POLE
	LMB	MAILBOX
	LPB	PAPER BOX
	LPST	POST, SINGLE
	LRB	ROCK, BOULDER
	LSHC	SHRUB, CONIFEROUS
	LSHD	SHRUB, DECIDUOUS
	LTC	TREE, CONIFEROUS
	LTD	TREE, DECIDUOUS
	LTS	TREE, STUMP
	LTW P	TREE, WELL OR WALL
	LUKP	UNKNOWN POINT

ITS

CELL	NAME	DESCRIPTION
	IANT P	ANTENNAS
	IASCTS	ACCOU. SPEED/COUNT SNSR.S
	ICABPAD	CABINET & PAD
	ICCTV	CCTV SITE
CDPD	ICDPD	CDPD TRANSCEIVER
	ICELLT	CELL PHONE TOWER
	ICJB	CONDUIT JACK OR BORING
	ICNTLCAB	CONTROLLER CABINET
	ICPB	COMMUNICATION PULL BOX
	ICTD	CONDUIT TURNING DOWN
	ICTU	CONDUIT TURNING UP
	ICVTRT	COMM. VEH. ROAD TRANSCEIVER
	IDEFAULT	DEFAULT
EZ	IEZR	E-ZPASS READER
EZ-T	IEZTR	TRANSMITTAL READER
XC	IFOXCAB	FIBER OPTIC X-CONNECT CABINET
	IFUSSPL	FUSION SPLICE
	IHARADV	HAR ADVISORY SIGN
	IHARST	HAR SITE
LC	ILC	LOAD CENTER
	IMECSPL	MECHANICAL SPLICE
PM	IMSCS	PORT. SPEED & COUNT SENSOR
M	IMSCTS	MICRO SPEED & COUNT SENSOR
M	IMT	MICROWAVE TRANSCEIVER
VMS	IOVHVMS	PERM. OVERHEAD VMS
PA	IPASCS	PORT. ACCOU. SPD & CNT. SENSOR
	IPEDS	PEDESTRIAN SIGNAL HEAD
	IPSS	PAVEMENT SURFACE SENSOR
PVMS	IPVMS	PERM. VMS
RM	IRM	RAMP METER
RWIS	IRWIS	RDWY WEATHER INFO. SENSOR
	ISP	SOLAR PANEL
SS	ISST	SPREAD SPECT. TRANSCEIVER
TC	ITDB	TELEPHONE DEMARCATION BLK
TP	ITP	SUBSURFACE TEMP. PROBE
	IVTRT	VEHICLE TO RDWY TRANSCEIVER
WIM	IWIMD	WEIGHT IN MOTION DETECTOR
WVR	IWVR	WIRELESS VIDEO REPEATER
V	IWVRC	WIRELESS VIDEO RECEIVER
V	IWVTT	WIRELESS VIDEO TRANSMITTER

ROW MAPPING

CELL	NAME	DESCRIPTION
	MDL1P	DEED LINE, TYPE 1
	MDL2P	DEED LINE, TYPE 2
	MDL3P	DEED LINE, TYPE 3
	MDL4P	DEED LINE, TYPE 4
	MDL5P	DEED LINE, TYPE 5
	MEEP	EASEMENT, EXISTING
	MEPAP_P	EASEMENT, PERM., APPROX.
	MEPP_P	EASEMENT, PERM., BACK LINE
	MEPSP_P	EASEMENT, PERM., SHAPE
	MFAP_P	FEE ACQUISITION, APPROX.
	MFP_P	FEE ACQUISITION, BACK LINE
	MFSP_P	FEE ACQUISITION, SHAPE
	MHBAP	HIGHWAY BNDRY., APPROX.
	MHBCP	HISTORICAL, BLDG. CORNERS
	MHBP	HIGHWAY BNDRY, PT.
	MJCP	PT., JURIS. CITY
	MPBC	PT., BUILDING CORNER
	MPCC	PT., CROSS CUT
	MPDH	PT., DRILL HOLE
	MPF	PT., FENCE LOCATION
	MPIP	PT., IRON PIPE
	MPIR	PT., IRON ROD
	MPM	PT., MONUMENT
	MPMM	PT., MONUMENT, MISC.
	MPN	PT., NAIL
	MPRS	PT., RAILROAD SPIKE
	MPSP	PT., SPIKE
	MPST	PT., STAKE
	MPTW	PT., TREE W/ WIRE
	MPWL	PT., WALL LOCATION

ROW ACQUISITION

M1 P1 FEE	MFS_P_T	FEE ACQUISITION
M1 P1 PE	MEPS_P_T	EASEMENT, PERMANENT
M1 P1 TE	METS_P_T	EASEMENT, TEMPORARY
M1 P1 TO	METS_P_T	OCCUPANCY, TEMPORARY
M1 P1 FEE WO/A	MFS_P_T	FEE ACQUISITION W/O ACCESS

ROADWAY

	RES P	ELEVATION, SPOT
	RGA	GUIDE RAIL, ANCHOR
	RGP	GUIDE POST, SINGLE

SIGNS

CELL	NAME	DESCRIPTION
	S	SINGLE POST
	S_P	SINGLE POST, PROPOSED
	SB_P	BACK TO BACK, PROPOSED
	SDEL	DELINEATORS
	SPM	PARKING METER
REM	SRM	REFERENCE MARKERS
	SRSC3	SHLD, CTY, 123 DIG.
	SRSC4	SHLD, CTY, 4 DIG.
	SRSCT2	SHLD, CTY TOUR, 1-2 DIG.
	SRSCT4	SHLD, CTY TOUR, 3-4 DIG.
	SRSI	SHLD, INTERSTATE
	SRSN2	SHLD, NATIONAL, 2 DIG.
	SRSN3	SHLD, NATIONAL, 3 DIG.
	SRSS2	SHLD, STATE, 2 DIG.
	SRSS3	SHLD, STATE, 3 DIG.
	SRSS4	SHLD, STATE, 4 DIG.

TRAFFIC CONTROL

	TCBJ	BOX, JUNCTION
	TCBP	BOX, PULL BOX
	TCBS	BOX, SPLICE
	TCMC	MICROCOMPUTER CABINET
	TCPP	PED POLE
	TCSH	SIGNAL HEADS
	TCSP	SIGNAL POLE

TRAFFIC WORK ZONE

	TWZAP_P	ARROW PANEL
	TWZAPC_P	ARROW PANEL, CAUTION MODE
	TWZAPT_P	ARROW PANEL, TRAILER OR SUPPORT
	TWZBCD_P	BARRICADE (TYPE III)
	TWZCMS_P	CHANGEABLE MESSAGE SIGN (PVMS)
	TWZFLG_P	FLAGGER
	TWZFT_P	FLAG TREE
	TWZIA_P	IMPACT ATTENUATOR / CRASH CUSHION (TEMPORARY)
	TWZLUM_P	LUMINAIRE (TEMPORARY)
	TWZSDT_P	SYMBOL, DIRECTION OF TRAFFIC
	TWZSDTD_P	SYMBOL, DIRECTION OF TEMPORARY TRAFFIC DETOUR
	TWZSGN_P	SIGN (TEMPORARY)
	TWZSIG_P	SIGNAL, TRAFFIC OR PEDESTRIAN (TEMPORARY)
	TWZWL_P	WARNING LIGHT
	TWZWV_P	WORK VEHICLE
	TWZWVA_P	WORK VEHICLE WITH TRUCK MOUNTED ATTENUATOR

UTILITIES

CELL	NAME	DESCRIPTION
	UEB	ELECTRIC, BOX
	UEM	ELECTRIC, METER
	UEMH	ELECTRIC, MANHOLE
	UEPT	ELECTRIC, POLE, TRANS.
	UGM	GAS, METER
	UGMH	GAS, MANHOLE
	UGLM	GAS, LINE MARKER
FP	UGP	GAS/FUEL PUMP
	UGV	GAS, VALVE
	UGVT	GAS, VENT
	ULP	LIGHTING, POLE
	ULPM	LIGHTING, POLE, MEDIAN
	ULPP	LIGHTING, POLE, PED.
	UMFC	MISC. FILLER CAP
	UOLM	OIL, LINE MARKER
	UP	POLE, WITH UTILITY
	UPD	POLE, DEAD (NO UTILITY)
	UPL	POLE, WITH LIGHT
	USMH	SANITARY SEWER MANHOLE
	UTB	TELEPHONE, BOOTH
	UTLM	TELEPHONE, LINE MARKER
	UTMH	TELEPHONE, MANHOLE
	UTVLM	CABLE TV, LINE MARKER
	UTVPB	CABLE TV, PULL BOX
	UUB	UNKNOWN, BOX
	UUJB	UNKNOWN, JUNCTION BOX
	UUMH	UNKNOWN, MANHOLE
	UUPB	UNKNOWN, PULL BOX
	UUVL	UNKNOWN, VALVE
	UUVT	UNKNOWN, VENT
	UUW	UNKNOWN, WELL
	UWFH	WATER, FIRE HYDRANT
	UWM	WATER, METER
	UWMH	WATER, MANHOLE
	UWV	WATER, VALVE
	UWW	WATER, WELL

1. THE LEGEND ILLUSTRATES MAPPING FEATURES (EXISTING AND PROPOSED).
2. FEATURES ARE SHOWN AS EITHER LINEAR (ROADWAY GUIDERAIL, ROADWAY SIDEWALK, UTILITY LINES, ETC.) OR POINT (SIGN, UTILITY POLE, ETC.).
3. FEATURES SHOWN ON THE LEGEND AS EXISTING FEATURES ALSO HAVE CORRESPONDING PROPOSED FEATURES.
4. PROPOSED FEATURE SYMBOLOGY IS IDENTICAL TO EXISTING (FEATURE SYMBOLOGY EXCLUDING LINE WEIGHT. LINE (WEIGHT FOR PROPOSED FEATURES IS THICKER (0.015 in (ON B SIZE DRAWINGS).
5. MAPPING FEATURES NOT INCLUDED ON THE LEGEND SHEET (DO NOT HAVE A UNIQUE SYMBOLOGY (SUCH AS THE (PAVEMENT EDGE, PAVEMENT EDGE OF TRAVEL WAY) AND SHOULD BE LABELED ON THE PLANS.
6. FEATURES SHOWN AT THE HEAVIER WEIGHT ARE PROPOSED (ONLY AND DO NOT HAVE CORRESPONDING EXISTING (FEATURES.

REVISIONS

DATE	DESCRIPTION	BY	SYM.

NEW YORK STATE | Thruway Authority

AECOM

TITLE OF PROJECT: SUPERSTRUCTURE REPLACEMENT GSP CONNECTOR OVER NYS THRUWAY

LOCATION OF PROJECT: BIN 5514049 (MP 23.53)

TITLE OF DRAWING: LEGENDS (2 OF 2)

CONTRACT NUMBER: TANY 26-23B

DATE: JULY 2026

DRAWING NUMBER: LEG-02

AICE | CHECKED BY: | IW / MR / VZ | DRAFTED BY: | AICE | CHECKED BY: | IW / MR / VZ | DESIGNED BY: | RWL | DESIGN SUPERVISOR:

New York State Thruway Authority Standard Sheets - Volume 1

The following NYS Thruway Authority standard sheets, marked with an "X" in first column, apply to this project.

X	SHEET NO.	SUBJECT
X	TA 201-01	Clearing and Grubbing *(Dwg. CG)*
X	TA 203-01	Shoulder Backup 1R Projects *(Dwg. SB)*
	TA 203-02	Slope Flattening Details
X	TA 404-01	Highway Pavement Repair Details *(Dwg. PRD)*
	TA 404-02	Bridge Deck Wearing Course Resurfacing *(Dwg. BDR)*
	TA 404-03	Overhead Bridge Underclearance Improvement *(Dwg. BU)*
	TA 603-01	Culvert Extension Details
	TA 605-01	Underdrain Details
	TA 606-01	Modified Thrie Beam (Mod.) Guiderail *(Dwgs. GR-1)*
	TA 606-02	Vacant
	TA 606-03	Corrugated Median Barrier to Corrugated Beam Guide Railing Transition Detail D *(Dwg. GR-4)*
	TA 606-04	Box Beam to 42" Single Slope Half Section Concrete Barrier Pier Protection *(Dwg. GR-5)*
	TA 606-05	HPBO (Mod.) Corrugated Beam to 42" Single Slope Half Section Concrete Barrier Pier Protection *(Dwg. GR-6)*
	TA 606-06	Typical U-Turn Median Rail Layout and Roadway Transverse Section
	TA 606-07	Modified Thrie Beam Guiderail with Rock Rail (Sheets 1-2)
	TA 606-08	Transition HPBO Corrugated Beam Median Guide Railing to HPBO Corrugated Beam Guide Railing
	TA 611-01	Living Snow Fences
	TA 614-01	Tree Removal
X	TA 619-01	Work Zone Traffic Control Tables & Legend
X	TA 619-02	General Work Zone Traffic Control Notes & Channelizing Devices
X	TA 619-03	Shoulder Closure Short-Term or Intermediate-Term Stationary
X	TA 619-04	Shoulder Closure Short-Duration Stationary and Mobile
X	TA 619-05	Signing & Delineation for Shoulder Work Spaces with Temporary Concrete Barrier
X	TA 619-06	Work Beyond Shoulder
	TA 619-07	Be Prepared to Stop and Uneven Lane Signing
x	TA 619-08	Single Lane Closure Short- or Intermediate-Term Stationary: 65 MPH Zone
	TA 619-09	Double Lane Closure Short- or Intermediate-Term Stationary: 65 MPH Zone
	TA 619-10	Center Lane Closure Short- or Intermediate-Term Stationary: 65 MPH Zone
	TA 619-11	Lane Shift: 65 MPH Zone
X	TA 619-12	Single Lane Closure Short- or Intermediate-Term Stationary: 55 MPH Zone
X	TA 619-13	Double Lane Closure Short- or Intermediate-Term Stationary: 55 MPH Zone
	TA 619-14	Center Lane Closure Short- or Intermediate-Term Stationary: 55 MPH Zone
X	TA 619-15	Lane Shift: 55 MPH Zone
X	TA 619-16	Work Zone Traffic Control at Interchanges, Service Areas and Parking Areas
X	TA 619-17	Work Zone Traffic Control for Miscellaneous Operations
X	TA 619-18	Mobile Lane Closure
	TA 619-19	Mobile Lane Closure: Narrow Shoulder Area
X	TA 619-20	Short-Duration Lane Closure
X	TA 619-21	Short-Duration Double Lane Closure
X	TA 619-22	Work Zone Traffic Control Guide for Pavement Striping Operations
X	TA 619-23	Mobile Lane Closure for Pavement Striping Operations
	TA 619-24	Mobile Lane Closure for Pavement Striping Operations: Narrow Shoulder Area
X	TA 619-25	Work Zone Traffic Control for Pavement Striping Operations at Interchanges, Service Areas and Parking Areas
	TA 619-26	Temporary Rock Catchment Barrier (Sheets 1-3)
	TA 619-27	Workzone Overhead Gantry Signing
	TA 625-01	ROW and Survey Markers
	TA 645-01	Wrong Way Deterrence Sign
X	TA 646-01	Reference Marker Details (Sheets 1-2)
	TA 670-01	Fiber Optic & Backbone Handhole Relocation Details
	TA 680-01	Inductance Loop Installation
	TA 680-02	Highway Advisory Radio (Sheets 1-9)
X	TA 685-01	Pavement Marking Details: Asphalt and Concrete Pavement (Sheets 1-2)
	TA 685-02	Pavement Marking Details: Tapered Acceleration and Deceleration Lanes
	TA 685-03	Vacant
X	TA 685-04	Temporary Pavement Marking Details
	TA 690-01	Loop and Treadle Plan (Sheets 1-2)
	TA 690-02	Toll Lane Slab Reinforcement Plan
	TA 690-03	10 ft Treadle Frame (Sheets 1-4)

The officially adopted New York State Thruway Authority Standard Sheets book is available on the Thruway Authority's website at:
http://www.thruway.ny.gov/business/contractors/standard-sheets/index.shtml

New York State Thruway Authority Standard Sheets - Volume 2

The following NYS Thruway Authority standard sheets, marked with an "X" in first column, apply to this project.

X	SHEET NO.	SUBJECT
		Book 1
X	TA 619-30	New York Division Traffic Management Tables (Sheets 1-28)
		Book 2
	TA 619-31	Albany Division 1, 150 Veh/Hr/Lane Traffic Management Tables (Sheets 1-18)
	TA 619-32	Albany Division 1, 300 Veh/Hr/Lane Traffic Management Tables (Sheets 1-18)
		Book 3
	TA 619-33	Syracuse Division 1, 150 Veh/Hr/Lane Traffic Management Tables (Sheets 1-18)
	TA 619-34	Syracuse Division 1, 300 Veh/Hr/ Lane Traffic Management Tables (Sheets 1-18)
		Book 4
	TA 619-35	Buffalo Division 1, 150 Veh/Hr/Lane Traffic Management Tables (Sheets 1-37)
	TA 619-36	Buffalo Division 1, 300 Veh/Hr/Lane Traffic Management Tables (Sheets 1-37)

The officially adopted New York State Thruway Authority Standard Sheets book is available on the Thruway Authority's website at:
http://www.thruway.ny.gov/business/contractors/standard-sheets/index.shtml

New York State Department of Transportation Standard Sheets

The latest revisions of the New York State Department of Transportation Standard sheets maintained by NYSDOT, which are current as of the Standard Specifications adoption date show on the Proposal cover, shall be considered to be in effect. All pay items and work contained in the Contract and any additional pay items and work encountered during the course of the Contract shall be subject to the applicable standard sheet(s) unless otherwise specified in the Contract documents.

The officially adopted New York State Department of Transportation Standard Sheets book is available on the NYSDOT website at:
https://www.dot.ny.gov/main/business-center/engineering/specifications/busi-e-standards-usc

Highway Work Type

The marked types & treatments apply to the indicated milepost range(s) below.

MILEPOST FROM:				
TO:				
PROJECT TYPE	**X**	**X**	**X**	**X**
1R Resurfacing				
2R Resurfacing				
3R Rehabilitation				
Reconstruction				
Safety Improvements				
Drainage				
Rock Slope Remediation				
Pavement Striping				
Other: Shoulder Reconstruction				

PAVEMENT TREATMENT	X	X	X	X
Isolated Pavement Repairs Only				
Thin Overlay without Milling				
Thin Overlay with Milling				
1" Mill & Inlay without Shoulders				
1" Mill & Inlay with Shoulders				
2" Mill & Inlay without Shoulders				
2" Mill & Inlay with Shoulders				
Mill to Concrete with 4" Overlay				
Mill to Concrete with 4.5" Overlay				
Mill to Concrete with 5" Overlay				
Crack and Seat with Overlay				
Rubblize with Overlay				
Other:				

Structure Work Type

The marked types apply to the indicated milepost(s) below.

MILEPOST:	23.53			
PROJECT TYPE	**X**	**X**	**X**	**X**
Bridge Washing				
Scour Protection				
Channel Cleaning				
Railing System				
Protective Screening				
Painting				
Steel Repair				
Wearing Surface Treatment				
Deck Repairs				
Joint Rehabilitation				
Joint Replacement				
Bearing Rehabilitation				
Bearing Replacement				
Hanger Pin Replacement				
Security				
Seismic Retrofit				
Substructure Rehabilitation				
Electrical				
Cathodic Protection System				
Fendor or Pier Protection System				
Deck Replacement				
Superstructure Replacement	X			
Bridge Replacement				
Added Bridge (New Location)				
Abandoned Bridge				
Other:				

DESIGN SUPERVISOR: RWL
DESIGNED BY: IW / MR / VZ
DRAFTED BY: AJCE
CHECKED BY: IW / MR / VZ
CHECKED BY: AJCE

REVISIONS			
DATE	DESCRIPTION	BY	SYM.

NEW YORK STATE | Thruway Authority

AECOM

TITLE OF PROJECT: SUPERSTRUCTURE REPLACEMENT GSP CONNECTOR OVER NYS THRUWAY

LOCATION OF PROJECT: BIN 5514049 (MP 23.53)

TITLE OF DRAWING: TABLE OF STANDARD SHEETS

CONTRACT NUMBER: TANY 26-23B

DATE: JULY 2026

DRAWING NUMBER: SS-01

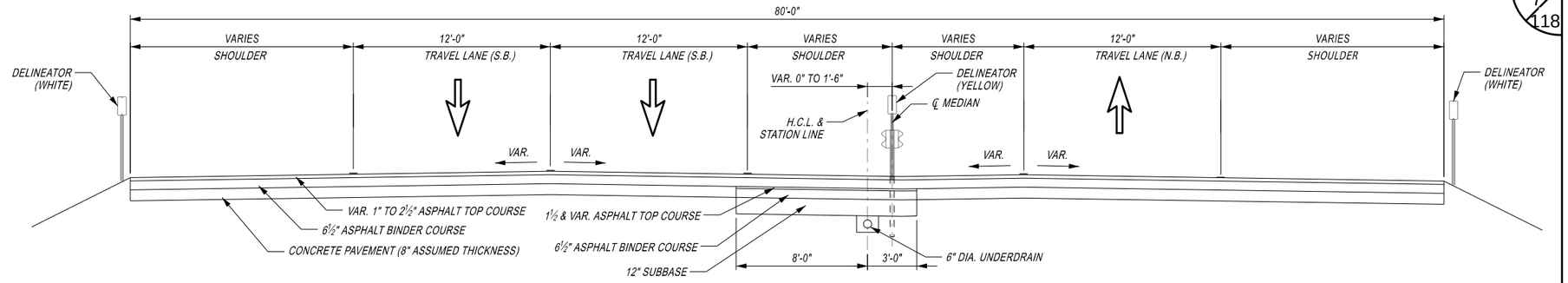

EXISTING TYPICAL SECTION
(STA. 118+00.00 TO STA. 137+00.00)

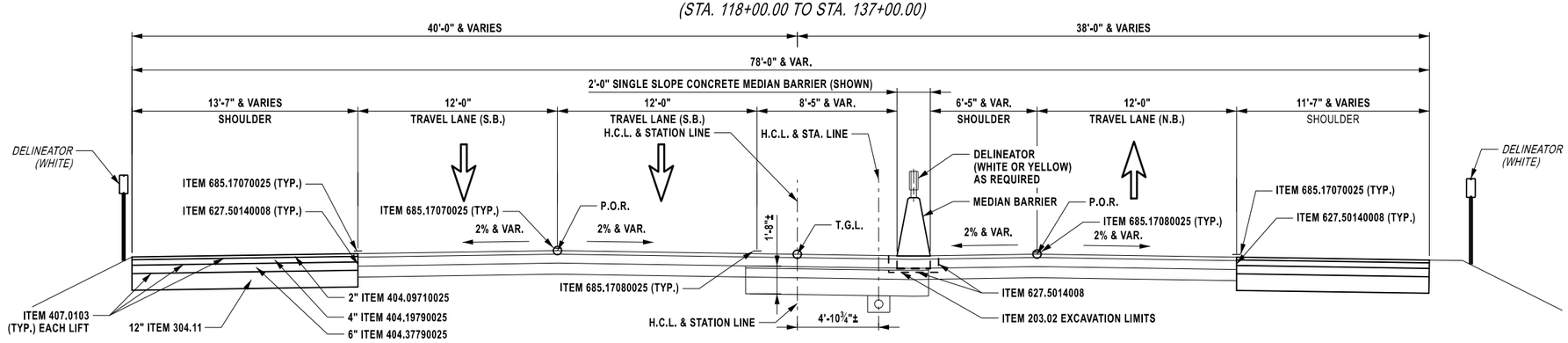

SOUTHBOUND SHOULDER REPLACEMENT
(STA. 121+00.00 TO STA. 125+19.66)
(STA. 128+67.77 TO STA. 137+00.00)

PROPOSED TYPICAL SECTION SHOULDER REPLACEMENT

NORTHBOUND SHOULDER REPLACEMENT
(STA. 119+00.00 TO STA. 125+19.66)
(STA. 128+67.77 TO STA. 137+00.00)

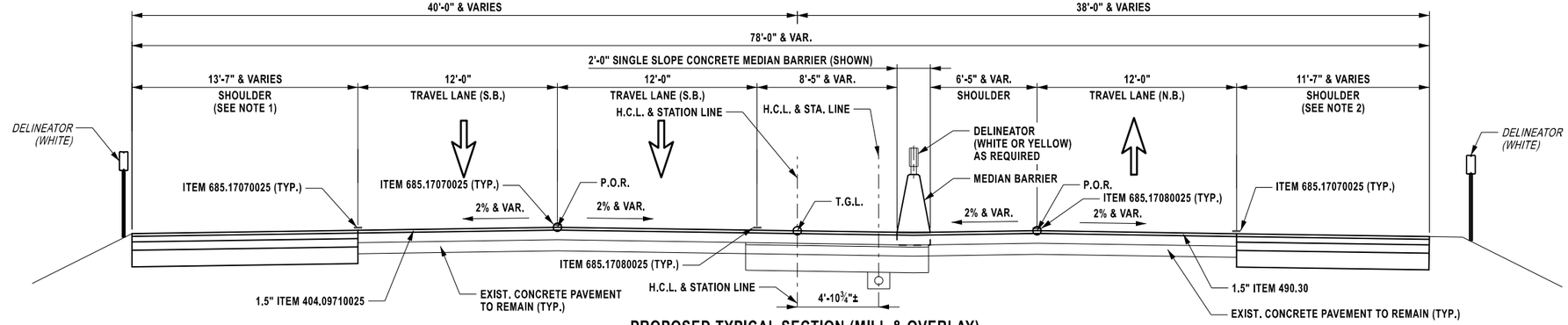

PROPOSED TYPICAL SECTION (MILL & OVERLAY)
(STA. 118+00.00 TO STA. 125+19.66)
(STA. 128+67.77 TO STA. 137+00.00)

NOTES:

1. SOUTHBOUND SHOULDER TO BE RECONSTRUCTED WITHIN THE MILL & OVERLAY LIMITS BETWEEN STA. 121+00.00 TO STA. 125+19.66 AND STA. 128+67.77 TO STA. 137+00.00.
2. NORTHBOUND SHOULDER TO BE RECONSTRUCTED WITHIN THE MILL & OVERLAY LIMITS BETWEEN STA. 119+00.00 TO STA. 125+19.66 AND STA. 128+67.77 TO STA. 137+00.00.

4 0 4 8 12 16'
1/8" = 1'

ITEM	DESCRIPTION	UNIT
203.02	UNCLASSIFIED EXCAVATION AND DISPOSAL	CY
304.11	SUBBASE COURSE, TYPE 1	CY
404.09710025	9.5 F1 TOP COURSE ASPHALT, 70 SERIES COMPACTION	TON
404.19790025	19 F9 BINDER COURSE ASPHALT, 70 SERIES COMPACTION	TON
404.37790025	37.5 F9 BASE COURSE ASPHALT, 70 SERIES COMPACTION	TON
407.0103	STRAIGHT TACK COAT	GAL
418.7603	ASPHALT PAVEMENT JOINT ADHESIVE	LF
490.30	MISCELLANEOUS COLD MILLING OF BITUMINOUS CONCRETE	LF

ITEM	DESCRIPTION	UNIT
627.50140008	CUTTING PAVEMENT	
685.17070025	WHITE HIGHLY REFLECTORIZED TRIPLE DROP EPOXY PAVEMENT STRIPES 6 INCH WIDTH x 20 mi	LF
685.17080025	YELLOW HIGHLY REFLECTORIZED TRIPLE DROP EPOXY PAVEMENT STRIPES 6 INCH WIDTH x 20 mil	LF

NOTES:

ALTERED ON:

AFFIXED ON: 08/10/2026

SIGNATURE:
STAMP:

SIGNATURE:
STAMP:

STATE OF NEW YORK
GERARD SENTZ
REGISTERED
062576
LICENSED PROFESSIONAL ENGINEER

IT IS A VIOLATION OF LAW FOR ANY PERSON, UNLESS THEY ARE ACTING UNDER THE DIRECTION OF A LICENSED PROFESSIONAL ENGINEER, ARCHITECT, LANDSCAPE ARCHITECT, OR LAND SURVEYOR, TO ALTER AN ITEM IN ANY WAY. IF AN ITEM BEARING THE STAMP OF A LICENSED PROFESSIONAL IS ALTERED, THE ALTERING ENGINEER, ARCHITECT, LANDSCAPE ARCHITECT, OR LAND SURVEYOR SHALL STAMP THE DOCUMENT AND INCLUDE THE NOTATION "ALTERED BY" FOLLOWED BY THEIR SIGNATURE, THE DATE OF SUCH ALTERATION, AND A SPECIFIC DESCRIPTION OF THE ALTERATION.

REVISIONS

DATE	DESCRIPTION	BY	SYM.

NEW YORK STATE Thruway Authority

AZAR DESIGN CO

TITLE OF PROJECT
SUPERSTRUCTURE REPLACEMENT
GSP CONNECTOR OVER NYS THRUWAY

LOCATION OF PROJECT
BIN 5514049 (MP 23.53)

TITLE OF DRAWING
TYPICAL HIGHWAY SECTIONS

CONTRACT NUMBER: TANY 26-23B

DATE: JULY 2026

DRAWING NUMBER: TYP-01

CHECKED BY:
DRAFTED BY:
CHECKED BY:
DESIGNED BY:
DESIGN SUPERVISOR:
PIN: XXXXXX
PRINTED BY: bwolfe
PRINTED ON: 4-AUG-2026 12:33

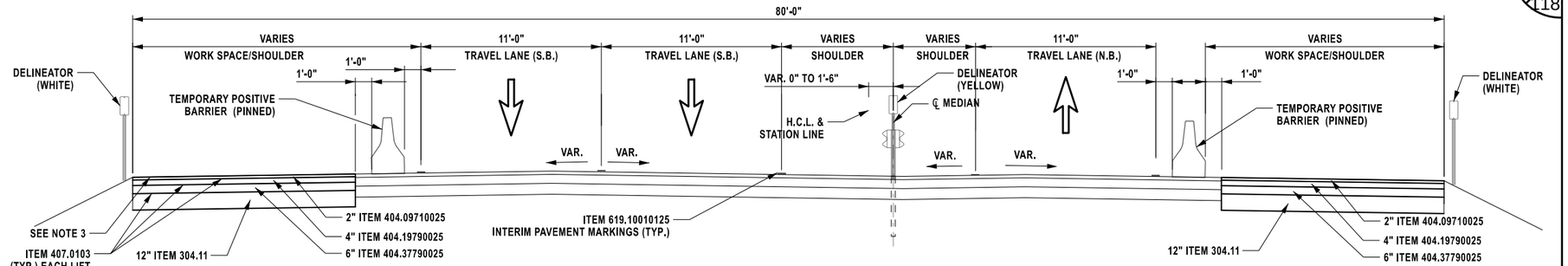

SOUTHBOUND SHOULDER REPLACEMENT
(STA. 121+00.00 TO STA. 125+42.26)
(STA. 128+45.34 TO STA. 135+00.00)

TYPICAL APPROACH SECTION (PRE-STAGE I)
(STA 118+00.00 TO STA 137+00.00)

NORTHBOUND SHOULDER REPLACEMENT
(STA. 118+00.00 TO STA. 125+42.26)
(STA. 128+45.34 TO STA. 137+00.00)

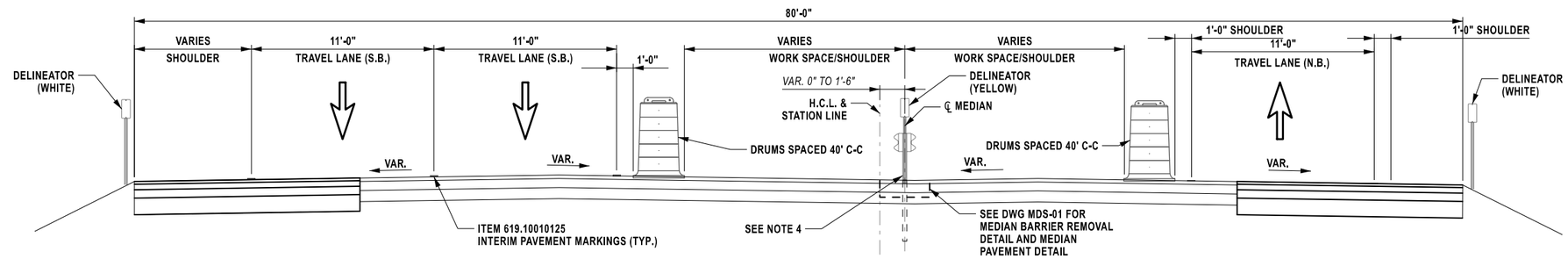

TYPICAL APPROACH SECTION (PRE-STAGE II)
(STA 118+00.00 TO STA 137+00.00)

NOTES:

1. SOUTHBOUND SHOULDER TO BE RECONSTRUCTED WITHIN THE MILL & OVERLAY LIMITS BETWEEN STA. 121+00.00 TO STA. 125+19.66 AND STA. 128+67.77 TO STA. 137+00.00.
2. NORTHBOUND SHOULDER TO BE RECONSTRUCTED WITHIN THE MILL & OVERLAY LIMITS BETWEEN STA. 119+00.00 TO STA. 125+19.66 AND STA. 128+67.77 TO STA. 137+00.00.
3. TEST PITS, TO BE PAID UNDER ITEM 206.05, ARE TO BE DUG IN THE SHOULDER TO DETERMINE EXTENT AND CONDITION OF THE CONCRETE PAVEMENT EVERY 50-FEET UNTIL NO CONCRETE IS FOUND. IF THE CONCRETE IS DETERMINED TO BE IN GOOD CONDITION THE CONTRACTOR SHALL ONLY MILL AND FILL THE TOP COURSE FOR THE EXTENTS OF THE CONCRETE PAVEMENT. FULL DEPTH RECONSTRUCTION WILL BE REQUIRED WHERE CONCRETE PAVEMENT DOES NOT EXIST OR IS IN POOR CONDITION.
4. SEE GENERAL PLANS FOR LIMITS OF MEDIAN BARRIER REMOVAL AND INSTALLATION.

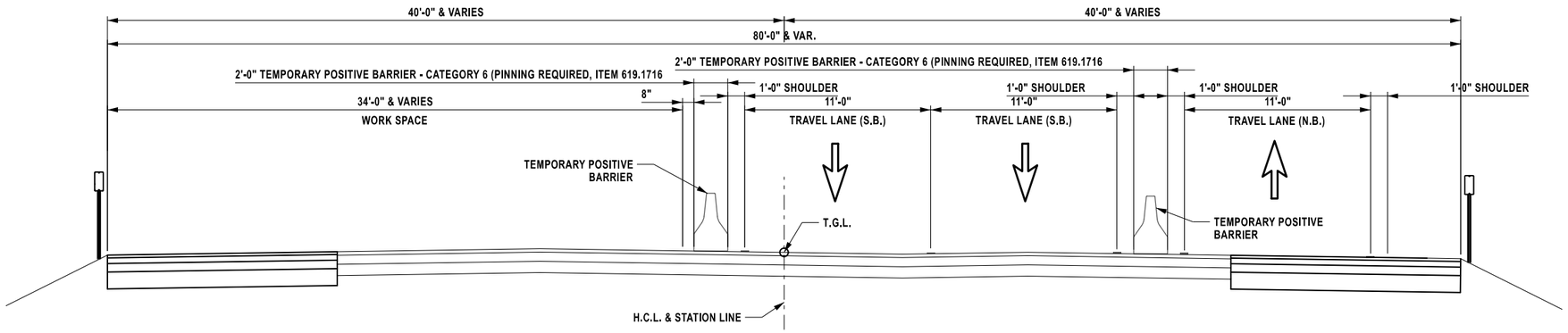

TYPICAL APPROACH SECTION (STAGE I)
(STA 125+42.26 TO STA 128+45.34)

4 0 4 8 12 16'
1/8" = 1'

ALTERED ON:	AFFIXED ON: 08/10/2026
SIGNATURE: STAMP:	SIGNATURE: STAMP: STATE OF NEW YORK · GERARD SENTZ · 062576 · LICENSED PROFESSIONAL ENGINEER

ITEM	DESCRIPTION	UNIT	ITEM	DESCRIPTION	UNIT
304.11	SUBBASE COURSE, TYPE 1	CY	685.17070025	WHITE HIGHLY REFLECTORIZED TRIPLE DROP EPOXY PAVEMENT STRIPES 6 INCH WIDTH x 20 ml	LF
404.09710025	9.5 F1 TOP COURSE ASPHALT, 70 SERIES COMPACTION	TON	685.17080025	YELLOW HIGHLY REFLECTORIZED TRIPLE DROP EPOXY PAVEMENT STRIPES 6 INCH WIDTH x 20 mil	LF
404.19790025	19 F9 BINDER COURSE ASPHALT, 70 SERIES COMPACTION	TON			
404.37790025	37.5 F9 BASE COURSE ASPHALT, 70 SERIES COMPACTION	TON			
407.0103	STRAIGHT TACK COAT	GAL			
619.10010125	INTERIM PAVEMENT MARKINGS, STRIPES (6 INCHES) TRAFFIC PAINT	LF			
627.50140008	CUTTING PAVEMENT	LF			

NOTES:

IT IS A VIOLATION OF LAW FOR ANY PERSON, UNLESS THEY ARE ACTING UNDER THE DIRECTION OF A LICENSED PROFESSIONAL ENGINEER, ARCHITECT, LANDSCAPE ARCHITECT, OR LAND SURVEYOR, TO ALTER AN ITEM IN ANY WAY. IF AN ITEM BEARING THE STAMP OF A LICENSED PROFESSIONAL IS ALTERED, THE ALTERING ENGINEER, ARCHITECT, LANDSCAPE ARCHITECT, OR LAND SURVEYOR SHALL STAMP THE DOCUMENT AND INCLUDE THE NOTATION "ALTERED BY" FOLLOWED BY THEIR SIGNATURE, THE DATE OF SUCH ALTERATION, AND A SPECIFIC DESCRIPTION OF THE ALTERATION.

REVISIONS

DATE	DESCRIPTION	BY	SYM.

NEW YORK STATE | Thruway Authority

AZAR DESIGN CO

TITLE OF PROJECT: SUPERSTRUCTURE REPLACEMENT GSP CONNECTOR OVER NYS THRUWAY

LOCATION OF PROJECT: BIN 5514049 (MP 23.53)

TITLE OF DRAWING: **TYPICAL APPROACH SECTIONS (SHEET 1 OF 2)**

CONTRACT NUMBER: TANY 26-23B

DATE: JULY 2026

DRAWING NUMBER: TYP-02

NOTES:

CHECKED BY:
DRAFTED BY:
CHECKED BY:
DESIGNED BY:
DESIGN SUPERVISOR:
PIN: XXXXXX
PRINTED BY: bwolfe
PRINTED ON: 4-AUG-2026 12:33

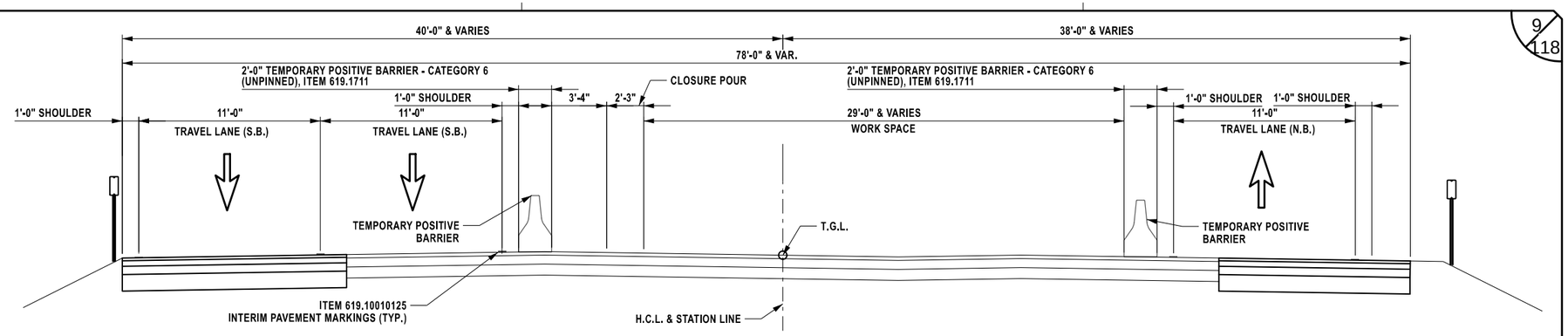

TYPICAL APPROACH SECTION (STAGE II)
(STA 125+42.26 TO STA 128+45.34)

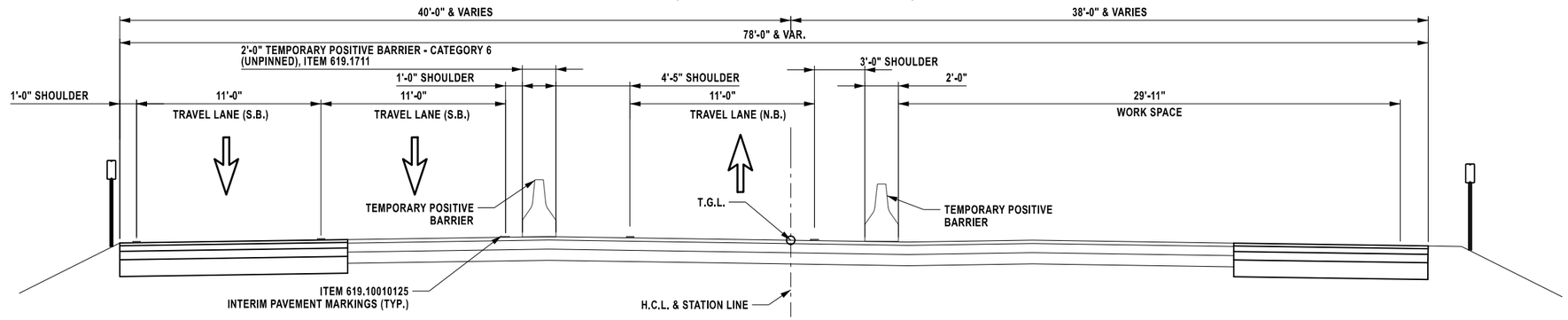

TYPICAL APPROACH SECTION (STAGE III)
(STA 125+42.26 TO STA 128+45.34)

NOTES:

1. SOUTHBOUND SHOULDER TO BE RECONSTRUCTED WITHIN THE MILL & OVERLAY LIMITS BETWEEN STA. 121+00.00 TO STA. 125+19.66 AND STA. 128+67.77 TO STA. 137+00.00.
2. NORTHBOUND SHOULDER TO BE RECONSTRUCTED WITHIN THE MILL & OVERLAY LIMITS BETWEEN STA. 119+00.00 TO STA. 125+19.66 AND STA. 128+67.77 TO STA. 137+00.00.
3. SEE GENERAL PLANS FOR LIMITS OF MEDIAN BARRIER REMOVAL AND INSTALLATION.

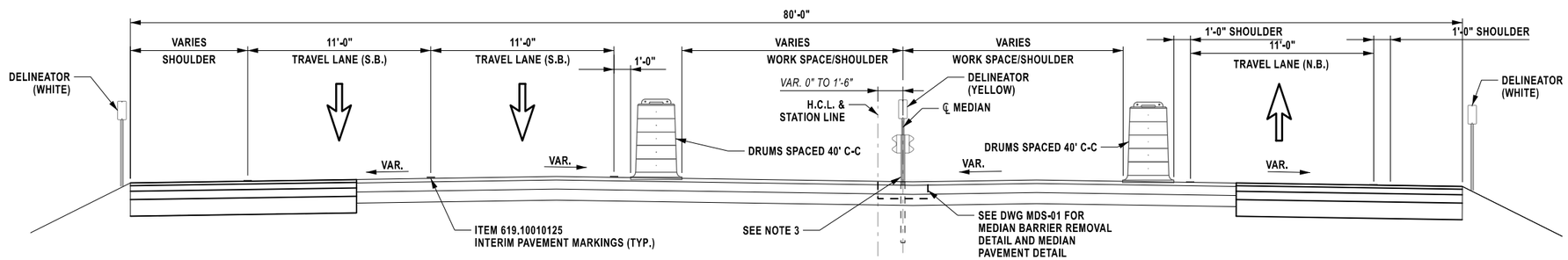

TYPICAL APPROACH SECTION (POST-STAGE)
(STA 118+00.00 TO STA 125+42.26)
(STA 128+45.34 TO STA 137+00.00)

4 0 4 8 12 16'
1/8" = 1'

ALTERED ON:	AFFIXED ON: 08/10/2026
SIGNATURE: STAMP:	SIGNATURE: STAMP: STATE OF NEW YORK · GERARD SENTZ · REGISTERED · 062576 · LICENSED PROFESSIONAL ENGINEER

ITEM	DESCRIPTION	UNIT
619.10010125	INTERIM PAVEMENT MARKINGS, STRIPES (6 INCHES) TRAFFIC PAINT	LF
619.1711	TEMPORARY POSITIVE BARRIER	LF

NOTES:

IT IS A VIOLATION OF LAW FOR ANY PERSON, UNLESS THEY ARE ACTING UNDER THE DIRECTION OF A LICENSED PROFESSIONAL ENGINEER, ARCHITECT, LANDSCAPE ARCHITECT, OR LAND SURVEYOR, TO ALTER AN ITEM IN ANY WAY. IF AN ITEM BEARING THE STAMP OF A LICENSED PROFESSIONAL IS ALTERED, THE ALTERING ENGINEER, ARCHITECT, LANDSCAPE ARCHITECT, OR LAND SURVEYOR SHALL STAMP THE DOCUMENT AND INCLUDE THE NOTATION "ALTERED BY" FOLLOWED BY THEIR SIGNATURE, THE DATE OF SUCH ALTERATION, AND A SPECIFIC DESCRIPTION OF THE ALTERATION.

REVISIONS

DATE	DESCRIPTION	BY	SYM.

NEW YORK STATE | Thruway Authority

AZAR DESIGN CO

TITLE OF PROJECT
SUPERSTRUCTURE REPLACEMENT
GSP CONNECTOR OVER NYS THRUWAY

LOCATION OF PROJECT
BIN 5514049 (MP 23.53)

TITLE OF DRAWING
TYPICAL APPROACH SECTIONS (SHEET 2 OF 2)

CONTRACT NUMBER: TANY 26-23B
DATE: JULY 2026
DRAWING NUMBER: TYP-03

CHECKED BY:
DRAFTED BY:
CHECKED BY:
DESIGNED BY:
DESIGN SUPERVISOR:
PIN: XXXXXX
PRINTED BY: bwolfe
PRINTED ON: 4-AUG-2026 12:23

GENERAL NOTES:

1. WORK ZONE TRAFFIC CONTROL (WZTC) SHALL BE PROVIDED IN ACCORDANCE WITH THE CURRENT MANUAL ON UNIFORM TRAFFIC CONTROL DEVICES (MUTCD) AND NEW YORK STATE SUPPLEMENT AND THE NEW YORK STATE DEPARTMENT OF TRANSPORTATION (NYSDOT) STANDARD SPECIFICATION SECTION 619, EXCEPT WHERE MODIFIED BY THE CONTRACT PLANS AND PROPOSAL.

2. IN ORDER TO MAINTAIN EFFECTIVE TRAFFIC CONTROL, THE CONTRACTOR SHALL BE RESPONSIBLE FOR MAINTENANCE OF THE TRAFFIC CONTROL; MAKING SURE ALL THE SIGNS, CONES, FLASHERS, DRUMS, ETC. ARE IN PLACE AND IN GOOD CONDITION. THE SOLE JUDGE OF THE EFFECTIVENESS OF THE CONTRACTOR'S EFFORTS TOWARDS THE WORK ZONE TRAFFIC CONTROL AND PERSONNEL SHALL BE THE E.I.C..

3. ALL TEMPORARY TRAFFIC CONTROL DEVICES MUST BE PREVIOUSLY APPROVED BY THE ENGINEER-IN-CHARGE AND NYSTA DIVISION TRAFFIC SUPERVISOR.

4. THE CONTRACTOR SHALL MAINTAIN AND PROTECT THRUWAY TRAFFIC IN ACCORDANCE WITH ITEM 619.01 AND THE TRAFFIC CONTROL SHEETS. THE CONTRACTOR'S ATTENTION IS DIRECTED TO THE REQUIREMENTS OF SECTION 107, LEGAL RELATIONS AND RESPONSIBILITY TO THE PUBLIC, OF THE LATEST REVISIONS OF THE STANDARD SPECIFICATIONS REFERENCEDIN THE PROJECT "PROPOSAL" EXCEPT AS MODIFIED IN THESE PLANS AND/OR BY CHANGES SET FORTH IN THE PROJECT "PROPOSAL".

5. PRIOR APPROVAL BY THE ENGINEER-IN-CHARGE IS REQUIRED FOR ANY LANE CLOSURES.

6. WHEN POSSIBLE, LANE CLOSURE TAPERS SHALL BE ESTABLISHED AWAY FROM CONFLICT POINTS, SUCH AS RAMPS. LANE CLOSURE TAPERS MUST ORIGINATE AT LOCATIONS TO PROVIDE OPTIMAL VISIBILITY.

7. THE PROPOSED LANE CLOSURE SCHEDULE FOR EACH WEEK SHALL BE SUBMITTED TO THE ENGINEER AT LEAST ONE WEEK IN ADVANCE AND SHALL INCLUDE LAYOUTS AND SIGNING. THIS PROPOSAL IS SUBJECT TO MODIFICATION BY THE ENGINEER AS TRAFFIC CONDITIONS WARRANT.

8. THE AUTHORITY MAY MODIFY ANY LANE CLOSURES DUE TO CIRCUMSTANCES AFFECTING TRAFFIC FLOW. THESE INCLUDE INCLEMENT WEATHER, TRAFFIC ACCIDENTS, VISIBILITY REDUCTION, OR ANY OTHER UNFORESEEN CIRCUMSTANCE. FOR BIDDING PURPOSES, TEN (10) OCCURRENCES PER YEAR SHALL BE CONSIDERED, AND ANY OTHER COSTS OR DELAYS SHALL NOT BE CLAIMED AGAINST THE AUTHORITY.

9. TRAFFIC IS TO BE MAINTAINED IN STRICT COMPLIANCE WITH THE CHARTS ENTITLED "LANE CLOSURE CHARTS". SEE NYSTA STANDARD SHEET TA 619-31 (SHEET 15 OF 18).

10. THE MINIMUM AVAILABLE TRAVEL WAY WIDTH MADE AVAILABLE AT ALL TIMES SHALL BE 11 FT. OR AS APPROVED BY THE NYSTA.

11. INTENDING DRIVING PATHS MUST BE CLEARLY DEFINED BY CHANNELIZING DEVICES. CHANNELIZING DEVICE REQUIREMENTS SHALL BE IN ACCORDANCE WITH SECTION 729 OF THE NYSDOT STANDARD SPECIFICATIONS AND MUTCD, AND TYPE AND SPACING REQUIREMENTS WITH SECTION 619 OF THE NYSDOT STANDARD SPECIFICATIONS.

12. ALL WORK REQUIRED TO CONSTRUCT, PREPARE, DELINEATE, AND SIGN WORK AREAS SHALL BE COMPLETED PRIOR TO MAINTAINING TRAFFIC THROUGH THE WORK AREA.

13. IF THE ENGINEER NOTIFIES THE CONTRACTOR OR HIS SUPERINTENDENT OF ANY HAZARDOUS CONSTRUCTION PRACTICES, ALL OPERATIONS IN THAT AREA SHALL BE DISCONTINUED AND IMMEDIATE REMEDIAL ACTION SHALL BE TAKEN TO THE SATISFACTION OF THE ENGINEER BEFORE WORK IS RESUMED.

14. THE CONTRACTOR SHALL MAINTAIN ACCESS FOR EMERGENCY VEHICLES THROUGHOUT THE PROJECT AREA AT ALL TIMES. ALL EXISTING HIGHWAY MEDIAN TURNAROUND AREAS SHALL REMAIN OPEN FOR EMERGENCY VEHICLE USE.

15. THE WORK AREA IS TO BE CLEANED DAILY AND LEFT IN AN ACCEPTABLE MANNER.

CHANGING WZTC SCHEMES:

17. WHEN IT IS NECESSARY TO CHANGE THE LANES THAT ARE CLOSED TO TRAFFIC, THE CONTRACTOR SHALL BE REQUIRED TO FIRST REMOVE ALL DRUMS, CONES, SIGNS, ARROWS, AND THE LIKE SO THAT ALL LANES ARE OPEN BEFORE THE NEW SCHEME IS SET IN PLACE. THIS METHOD MAY BE MODIFIED BY THE ENGINEER, AS NECESSARY.

18. WHEN REOPENING TRAVEL LANES TO TRAFFIC, THE CONTRACTOR SHALL START BY REMOVING THE CONES AT THE FAR END OF THE LANE CLOSURE AND WORK TOWARDS THE SIGNS AT THE BEGINNING OF THE LANE CLOSURE. THE SIGNS ARE NOT TO BE TAKEN DOWN UNTIL ALL TRAFFIC CONTROL DEVICES HAVE BEEN REMOVED.

CONSTRUCTION VEHICLE NOTES:

19. BARRIER VEHICLES SHALL BE USED TO PROTECT WORKERS AND/OR CONSTRUCTION EQUIPMENT WITHIN THE WORK AREA. PLACEMENT SHALL CONFORM TO NYSTA STANDARD DRAWINGS.

20. DURING NON-WORKING HOURS, ALL CONSTRUCTION EQUIPMENT AND MATERIALS SHALL BE STORED AT LEAST 30 FT FROM THE EDGE OF PAVEMENT OR BE PROTECTED BY A GUIDE RAIL SYSTEM APPROVED BY THE ENGINEER.

21. PRIVATE VEHICLES OWNED BY THE CONTRACTOR OR THE CONTRACTOR'S WORKERS SHALL NOT BE PARKED ON THE PAVEMENT, OR SHOULDERS, OR ANY OTHER AREAS DEEMED BY THE ENGINEER TO BE HAZARDOUS LOCATIONS.

22. ALL VEHICLES THAT WILL BE MOVING IN AND OUT OF TRAFFIC AT WORK AREAS SHALL BE EQUIPPED WITH AN APPROVED AMBER ROTATING SAFETY LIGHT. THE LIGHTS SHALL BE MOUNTED SO AS TO BE EASILY SEEN BY APPROACHING TRAFFIC.

23. ALL SHADOW VEHICLES SHALL WEIGH IN EXCESS OF 22.0 TONS (19,958.1 kg). SHADOW VEHICLES SHALL BE EQUIPPED WITH MOBILE CONSTRUCTION ZONE IMPACT ATTENUATORS, AS CALLED FOR UNDER 619-2.02, BASIC WORK ZONE TRAFFIC CONTROL.

24. DRIVING AGAINST TRAFFIC AT ANY TIME, REGARDLESS OF WHETHER OR NOT THE AREA HAS BEEN CLOSED TO TRAFFIC, SHALL NOT BE PERMITTED, EXCEPT FOR TRAFFIC DRUM PICKUP, AND AS SPECIFICALLY PERMITTED BY THE ENGINEER.

25. ESCORT VEHICLES EQUIPPED WITH A ROTATING AMBER LIGHT OR AN OPERATING ARROW PANEL SHALL BE REQUIRED WHEN TRANSPORTING SLOW-MOVING CONSTRUCTION EQUIPMENT ALONG ANY PORTION OF THE ROADWAY OPEN TO TRAFFIC.

ROADSIDE HAZARD NOTES:

26. IF THE SHOULDER TO BE USED FOR WORK ZONE TRAFFIC CONTROL SHOWS SIGNS OF DISTRESS, IT SHALL BE REPLACED PRIOR TO TRAFFIC BEING PLACED ON IT. THE SHOULDER SHALL BE CLOSED USING THE TYPICAL WORK ZONE TRAFFIC CONTROL SCHEMES FOR SHOULDER CLOSURES SHOWN IN THE NYSTA STANDARD SHEETS.

27. EXCAVATIONS THAT PRODUCE A DROP-OFF ON BOTH SIDES OF THE TRAVEL LANES SHALL NOT BE PERMITTED, UNLESS PROTECTED WITH A CONCRETE BARRIER. SEE TABLE 619-3 IN SECTION 619-3.02K FOR DROP-OFF DELINEATION REQUIREMENTS.

28. WHEN NOT IN USE, THE CONTRACTOR SHALL NOT STORE ANY CONSTRUCTION EQUIPMENT, SIGNS, TRAFFIC CONTROL DEVICES, MATERIALS OR ANY OTHER APPURTENANCES ALONG THE ROADWAY WITHIN THE CLEAR ZONE UNLESS PROTECTED BY AN APPROVED PHYSICAL BARRIER.

29. EXISTING GUIDE RAIL SHALL REMAIN IN PLACE UNTIL CONSTRUCTION ACTIVITIES NECESSITATE REMOVAL. NEW GUIDE RAIL SHALL BE INSTALLED WITHIN 14 DAYS IN ACCORDANCE WITH SECTION 619-3.02.E. DELINEATION AND DROP-OFF PROTECTION SHALL BE AS SPECIFIED IN SECTION 619 WORK ZONE TRAFFIC CONTROL.

BARRIER VEHICLE WITH MOUNTED ATTENUATORS:

30. BARRIER VEHICLES (BV) WITH MOUNTED ATTENUATORS ARE REQUIRED WHEN WORKERS ARE PRESENT IN A CLOSED TRAVEL LANE OR CLOSED SHOULDER. A BV SHALL BE USED AT EACH WORK LOCATION WITHIN THE CLOSURE. THE COST SHALL BE INCLUDED IN THE COST BID FOR ITEM 619.01.

31. BARRIER VEHICLES WITH MOUNTED ATTENUATORS SHALL BE PLACED TO ACCOMMODATE ANTICIPATED ROLL-AHEAD DISTANCE (DISTANCE BETWEEN FRONT OF THE BV TRUCK AND THE FIRST WORKER OR VEHICLE TO BE PROTECTED). FOLLOW THE TRUCK MANUFACTURER'S INSTRUCTIONS.

FLASHING ARROW PANEL:

32. FLASHING ARROW PANELS SHALL COMPLY WITH SECTION 729-15 OF THE STANDARD SPECIFICATIONS.

33. THE COST OF THE FLASHING ARROW PANEL SHALL BE INCLUDED IN THE PRICE BID FOR ITEM 619.01.

SEQUENCE OF CONSTRUCTION:

PRESTAGE 1
RECONSTRUCT SHOULDERS WHERE INDICATED ON THE NORTHBOUND AND SOUTHBOUND APPROACHES TO THE BRIDGE.

PRESTAGE 2
REMOVE THE EXISTING MEDIAN BARRIER.
PAVE THE MEDIAN TO MATCH EXISTING.

STAGE 1
SHIFT TRAFFIC TO THE EAST.
RECONSTRUCT THE WESTERN SIDE OF THE BRIDGE.

STAGE 2
SHIFT THE TRAFFIC TO THE OUTSIDE OF THE BRIDGE.
RECONSTRUCT THE CENTER OF THE BRIDGE.

STAGE 3
SHIFT THE TRAFFIC TO THE WEST.
RECONTRUCT THE EASTERN SIDE OF THE BRIDGE.

POSTSTAGE
INSTALL AND RESET THE MEDIAN BARRIER REMOVED IN PRESTAGE 2.

ALTERED ON:	AFFIXED ON: 08/10/2026
SIGNATURE: STAMP:	SIGNATURE: GERARD J. SENTZ, PE STAMP: STATE OF NEW YORK · GERARD SENTZ · 062576 · LICENSED PROFESSIONAL ENGINEER

IT IS A VIOLATION OF LAW FOR ANY PERSON, UNLESS THEY ARE ACTING UNDER THE DIRECTION OF A LICENSED PROFESSIONAL ENGINEER, ARCHITECT, LANDSCAPE ARCHITECT, OR LAND SURVEYOR, TO ALTER AN ITEM IN ANY WAY. IF AN ITEM BEARING THE STAMP OF A LICENSED PROFESSIONAL IS ALTERED, THE ALTERING ENGINEER, ARCHITECT, LANDSCAPE ARCHITECT, OR LAND SURVEYOR SHALL STAMP THE DOCUMENT AND INCLUDE THE NOTATION "ALTERED BY" FOLLOWED BY THEIR SIGNATURE, THE DATE OF SUCH ALTERATION, AND A SPECIFIC DESCRIPTION OF THE ALTERATION.

REVISIONS

DATE	DESCRIPTION	BY	SYM.

NEW YORK STATE | Thruway Authority

AZAR DESIGN CO

TITLE OF PROJECT
SUPERSTRUCTURE REPLACEMENT
GSP CONNECTOR OVER NYS THRUWAY

LOCATION OF PROJECT
BIN 5514049 (MP 23.53)

TITLE OF DRAWING
TEMPORARY TRAFFIC CONTROL NOTES

CONTRACT NUMBER: TANY 26-23B

DATE: JULY 2026

DRAWING NUMBER: WZN-01

DESIGN SUPERVISOR: DESIGNED BY: DRAFTED BY: CHECKED BY: CHECKED BY:

PRINTED ON: 4-AUG-2026 12:33 PRINTED BY: bwolfe PIN: XXXXXX

SIGNING NOTES:

1. SIGN LOCATIONS AS SHOWN ON PLANS ARE APPROXIMATE. THE CONTRACTOR SHALL INSTALL NEW SIGNS AND RELOCATE EXISTING SIGNS IN ACCORDANCE WITH THE MUTCD AND NYS SUPPLEMENT.

SIGN	TEXT	SIZE	SIGN	TEXT	SIZE
NYR9-12	STATE LAW FINES DOUBLED FOR SPEEDING IN WORK ZONES	48" X 72"	W1-4bL		48" X 48"
G20-5aP	WORK ZONE	36" X 24"	W1-4bR		48" X 48"
OM-3L		12" X 36"	W20-1	ROAD WORK AHEAD	48" X 48"
OM-3R		12" X 36"	G20-2	END ROAD WORK	48" X 24"
R2-11	END HIGHER FINES ZONE	36" X 48"			
R4-9	STAY IN LANE	36" X 48"			
W1-4L		48" X 48"			
W1-4R		48" X 48"			

TEMPORARY BARRIER

PVMS

CRASH CUSHION/TEMPORARY IMPACT ATTENUATOR

CHECKED BY:

DRAFTED BY:

CHECKED BY:

DESIGNED BY:

DESIGN SUPERVISOR:

PRINTED ON: 4-AUG-2026 12:33 PRINTED BY: bwolfe PIN: XXXXXX

ALTERED ON:	AFFIXED ON: 08/10/2026
SIGNATURE: STAMP:	SIGNATURE: GERARD J. SENTZ, PE STAMP: STATE OF NEW YORK GERARD SENTZ 062576 LICENSED PROFESSIONAL ENGINEER

IT IS A VIOLATION OF LAW FOR ANY PERSON, UNLESS THEY ARE ACTING UNDER THE DIRECTION OF A LICENSED PROFESSIONAL ENGINEER, ARCHITECT, LANDSCAPE ARCHITECT, OR LAND SURVEYOR, TO ALTER AN ITEM IN ANY WAY. IF AN ITEM BEARING THE STAMP OF A LICENSED PROFESSIONAL IS ALTERED, THE ALTERING ENGINEER, ARCHITECT, LANDSCAPE ARCHITECT, OR LAND SURVEYOR SHALL STAMP THE DOCUMENT AND INCLUDE THE NOTATION "ALTERED BY" FOLLOWED BY THEIR SIGNATURE, THE DATE OF SUCH ALTERATION, AND A SPECIFIC DESCRIPTION OF THE ALTERATION.

REVISIONS

DATE	DESCRIPTION	BY	SYM.

NEW YORK STATE | Thruway Authority

AZAR DESIGN CO

TITLE OF PROJECT
SUPERSTRUCTURE REPLACEMENT
GSP CONNECTOR OVER NYS THRUWAY

LOCATION OF PROJECT
BIN 5514049 (MP 23.53)

TITLE OF DRAWING
WORK ZONE SIGN TABLE

CONTRACT NUMBER: TANY 26-23B

DATE: JULY 2026

DRAWING NUMBER: WZS-01

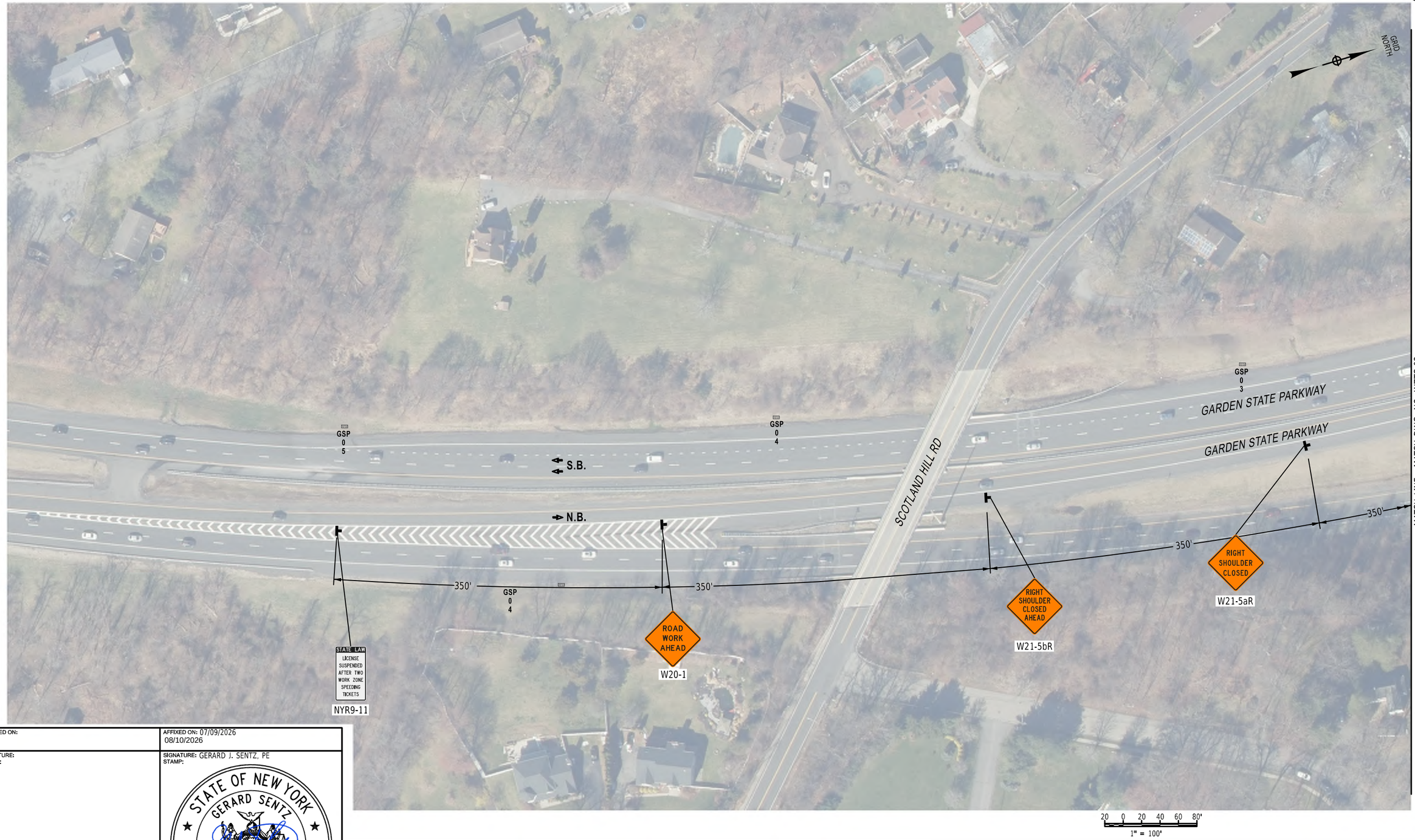

ALTERED ON:	AFFIXED ON: 07/09/2026 08/10/2026
SIGNATURE: STAMP:	SIGNATURE: GERARD J. SENTZ, PE STAMP:

STATE OF NEW YORK
GERARD SENTZ
062576
LICENSED PROFESSIONAL ENGINEER

IT IS A VIOLATION OF LAW FOR ANY PERSON, UNLESS THEY ARE ACTING UNDER THE DIRECTION OF A LICENSED PROFESSIONAL ENGINEER, ARCHITECT, LANDSCAPE ARCHITECT, OR LAND SURVEYOR, TO ALTER AN ITEM IN ANY WAY. IF AN ITEM BEARING THE STAMP OF A LICENSED PROFESSIONAL IS ALTERED, THE ALTERING ENGINEER, ARCHITECT, LANDSCAPE ARCHITECT, OR LAND SURVEYOR SHALL STAMP THE DOCUMENT AND INCLUDE THE NOTATION "ALTERED BY" FOLLOWED BY THEIR SIGNATURE, THE DATE OF SUCH ALTERATION, AND A SPECIFIC DESCRIPTION OF THE ALTERATION.

REVISIONS

DATE	DESCRIPTION	BY	SYM.

NEW YORK STATE | Thruway Authority

AZAR DESIGN CO

TITLE OF PROJECT
SUPERSTRUCTURE REPLACEMENT
GSP CONNECTOR OVER NYS THRUWAY

LOCATION OF PROJECT
BIN 5514049 (MP 23.53)

TITLE OF DRAWING
PRE-STAGE I
WORK ZONE TRAFFIC CONTROL PLAN

CONTRACT NUMBER: TANY 26-23B

DATE: JULY 2026

DRAWING NUMBER: WZTC-01

CHECKED BY:
DRAFTED BY:
CHECKED BY:
DESIGNED BY:
DESIGN SUPERVISOR:
PIN: XXXXXX
PRINTED BY: bwolfe
PRINTED ON: 4-AUG-2026 12:34

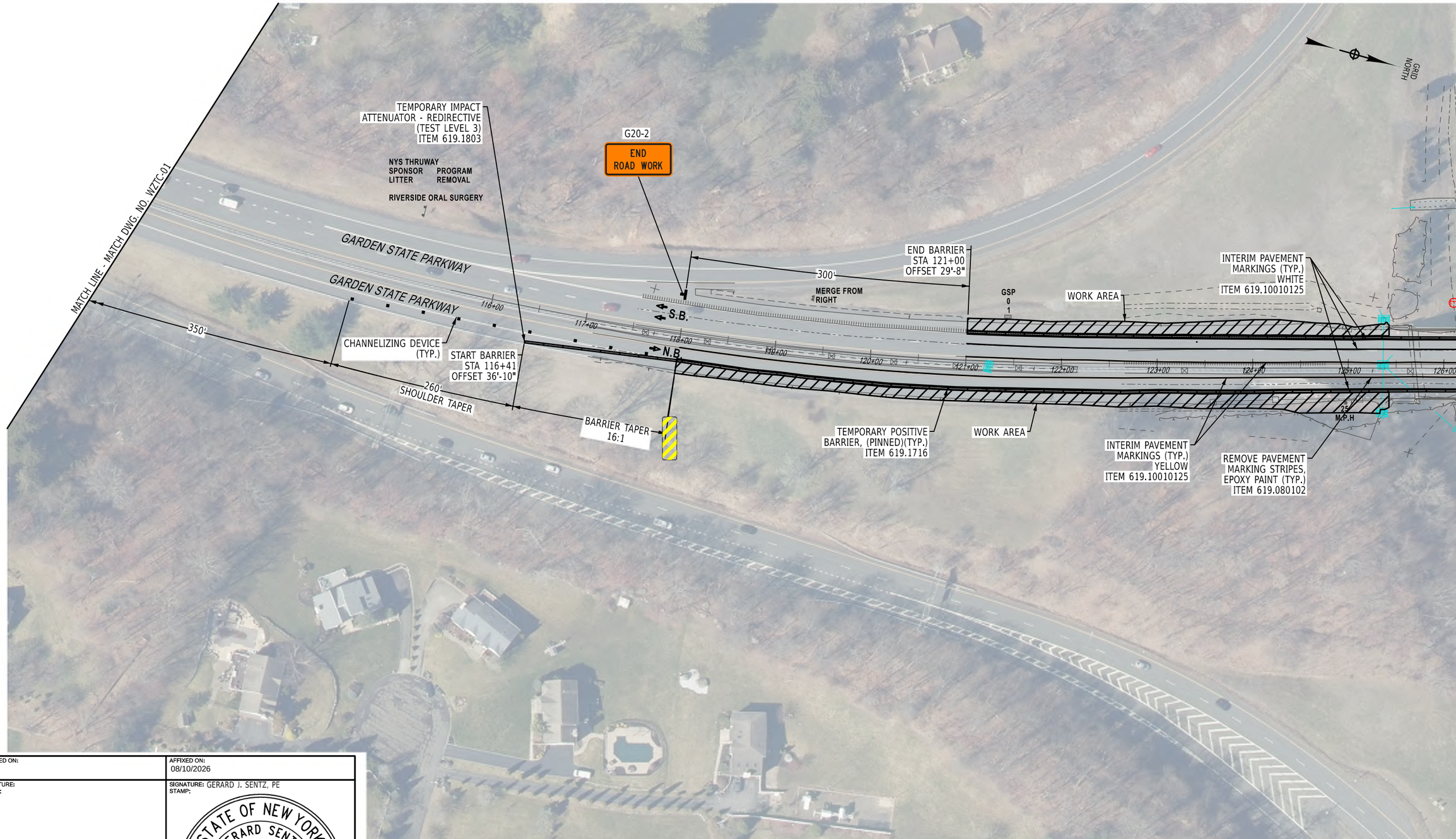

CHECKED BY:
DRAFTED BY:
CHECKED BY:
DESIGNED BY:
DESIGN SUPERVISOR:

PRINTED ON: 4-AUG-2026 12:35 PRINTED BY: bwolfe PN: XXXXXX

ALTERED ON:	AFFIXED ON: 08/10/2026
SIGNATURE: STAMP:	SIGNATURE: GERARD J. SENTZ, PE STAMP: STATE OF NEW YORK GERARD SENTZ 062576 LICENSED PROFESSIONAL ENGINEER

IT IS A VIOLATION OF LAW FOR ANY PERSON, UNLESS THEY ARE ACTING UNDER THE DIRECTION OF A LICENSED PROFESSIONAL ENGINEER, ARCHITECT, LANDSCAPE ARCHITECT, OR LAND SURVEYOR, TO ALTER AN ITEM IN ANY WAY. IF AN ITEM BEARING THE STAMP OF A LICENSED PROFESSIONAL IS ALTERED, THE ALTERING ENGINEER, ARCHITECT, LANDSCAPE ARCHITECT, OR LAND SURVEYOR SHALL STAMP THE DOCUMENT AND INCLUDE THE NOTATION "ALTERED BY" FOLLOWED BY THEIR SIGNATURE, THE DATE OF SUCH ALTERATION, AND A SPECIFIC DESCRIPTION OF THE ALTERATION.

REVISIONS

DATE	DESCRIPTION	BY	SYM.

NEW YORK STATE | Thruway Authority

AZAR DESIGN CO

TITLE OF PROJECT
SUPERSTRUCTURE REPLACEMENT
GSP CONNECTOR OVER NYS THRUWAY

LOCATION OF PROJECT
BIN 5514049 (MP 23.53)

TITLE OF DRAWING
PRE-STAGE I
WORK ZONE TRAFFIC CONTROL PLAN

CONTRACT NUMBER: TANY 26-23B

DATE: JULY 2026

DRAWING NUMBER: WZTC-02

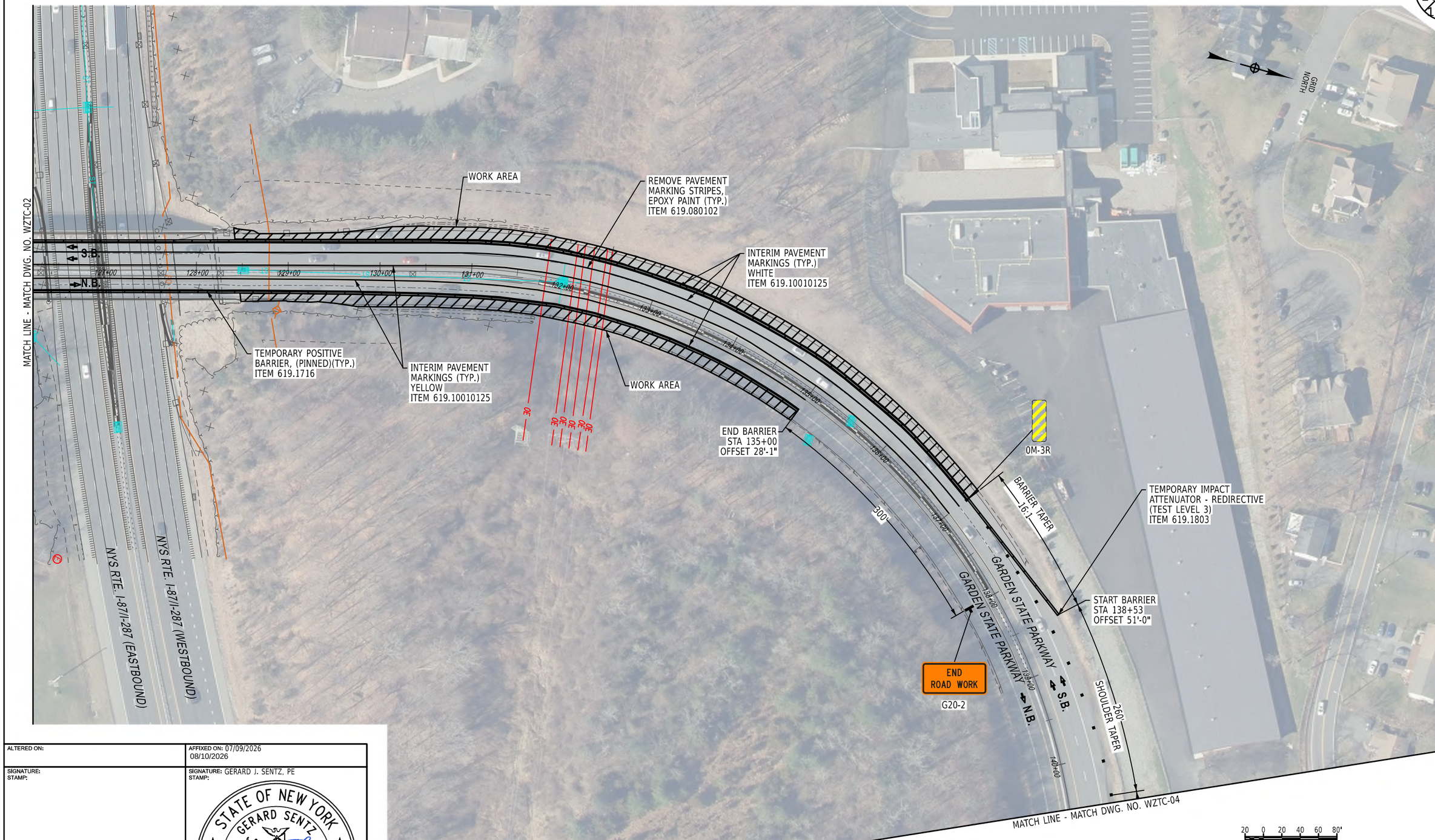

ALTERED ON:	AFFIXED ON: 07/09/2026 08/10/2026
SIGNATURE: STAMP:	SIGNATURE: GERARD J. SENTZ, PE STAMP: STATE OF NEW YORK · GERARD SENTZ · 062576 · LICENSED PROFESSIONAL ENGINEER

IT IS A VIOLATION OF LAW FOR ANY PERSON, UNLESS THEY ARE ACTING UNDER THE DIRECTION OF A LICENSED PROFESSIONAL ENGINEER, ARCHITECT, LANDSCAPE ARCHITECT, OR LAND SURVEYOR, TO ALTER AN ITEM IN ANY WAY. IF AN ITEM BEARING THE STAMP OF A LICENSED PROFESSIONAL IS ALTERED, THE ALTERING ENGINEER, ARCHITECT, LANDSCAPE ARCHITECT, OR LAND SURVEYOR SHALL STAMP THE DOCUMENT AND INCLUDE THE NOTATION "ALTERED BY" FOLLOWED BY THEIR SIGNATURE, THE DATE OF SUCH ALTERATION, AND A SPECIFIC DESCRIPTION OF THE ALTERATION.

REVISIONS

DATE	DESCRIPTION	BY	SYM.

NEW YORK STATE | Thruway Authority

AZAR DESIGN CO

TITLE OF PROJECT
SUPERSTRUCTURE REPLACEMENT
GSP CONNECTOR OVER NYS THRUWAY

LOCATION OF PROJECT
BIN 5514049 (MP 23.53)

TITLE OF DRAWING
PRE-STAGE I
WORK ZONE TRAFFIC CONTROL PLAN

CONTRACT NUMBER: TANY 26-23B

DATE: JULY 2026

DRAWING NUMBER: WZTC-03

CHECKED BY:
DRAFTED BY:
CHECKED BY:
DESIGNED BY:
DESIGN SUPERVISOR:

PIN: XXXXXX
PRINTED BY: bwolfe
PRINTED ON: 4-AUG-2026 12:36

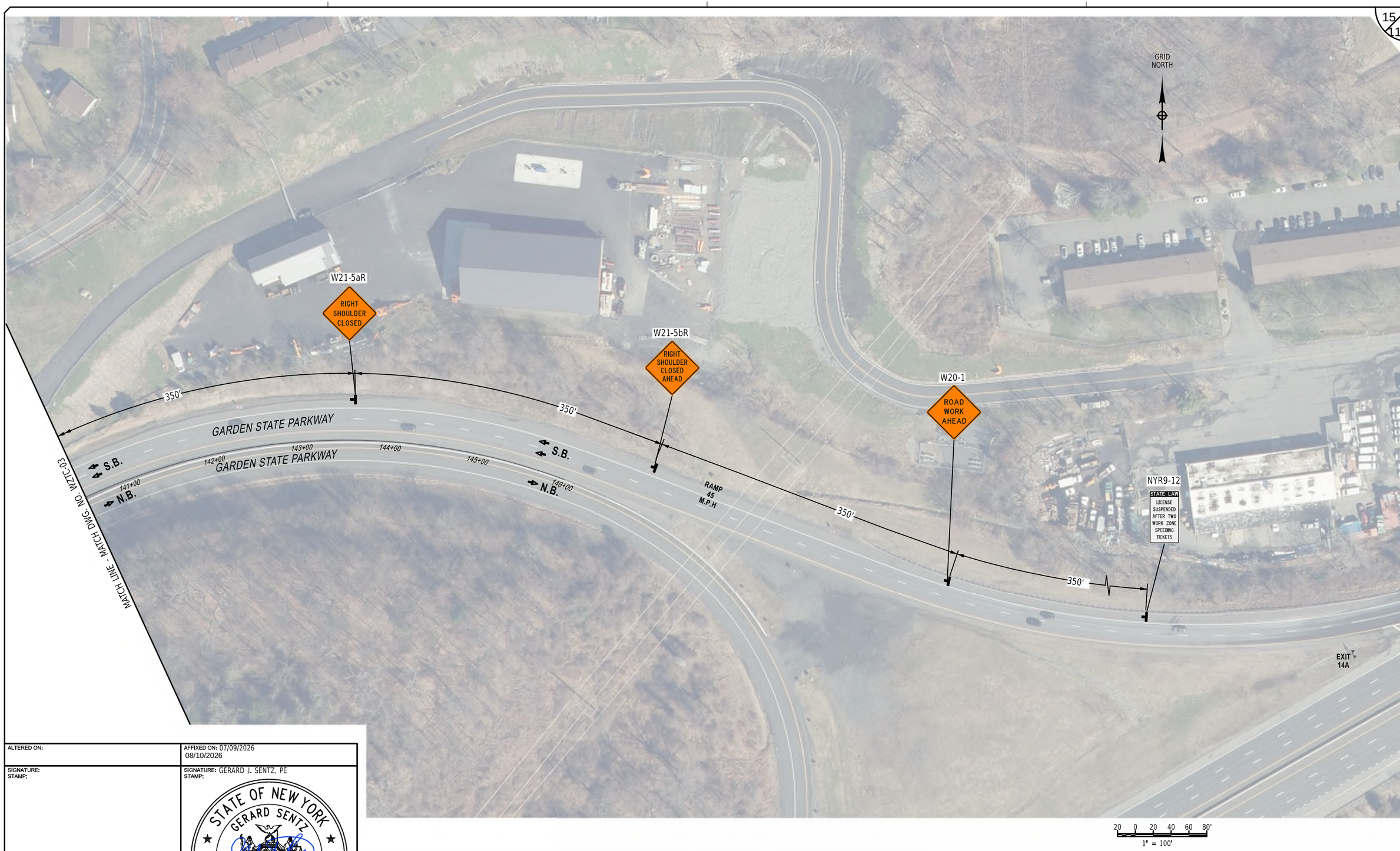

ALTERED ON:	AFFIXED ON: 07/09/2026 08/10/2026
SIGNATURE: STAMP:	SIGNATURE: GERARD J. SENTZ, PE STAMP:

STATE OF NEW YORK
GERARD SENTZ
062576
LICENSED PROFESSIONAL ENGINEER

IT IS A VIOLATION OF LAW FOR ANY PERSON, UNLESS THEY ARE ACTING UNDER THE DIRECTION OF A LICENSED PROFESSIONAL ENGINEER, ARCHITECT, LANDSCAPE ARCHITECT, OR LAND SURVEYOR, TO ALTER AN ITEM IN ANY WAY. IF AN ITEM BEARING THE STAMP OF A LICENSED PROFESSIONAL IS ALTERED, THE ALTERING ENGINEER, ARCHITECT, LANDSCAPE ARCHITECT, OR LAND SURVEYOR SHALL STAMP THE DOCUMENT AND INCLUDE THE NOTATION "ALTERED BY" FOLLOWED BY THEIR SIGNATURE, THE DATE OF SUCH ALTERATION, AND A SPECIFIC DESCRIPTION OF THE ALTERATION.

REVISIONS

DATE	DESCRIPTION	BY	SYM.

NEW YORK STATE | Thruway Authority

AZAR DESIGN CO

TITLE OF PROJECT
SUPERSTRUCTURE REPLACEMENT
GSP CONNECTOR OVER NYS THRUWAY

LOCATION OF PROJECT
BIN 5514049 (MP 23.53)

TITLE OF DRAWING
PRE-STAGE I
WORK ZONE TRAFFIC CONTROL PLAN

CONTRACT NUMBER: TANY 26-23B

DATE: JULY 2026

DRAWING NUMBER: WZTC-04

CHECKED BY:
DRAFTED BY:
CHECKED BY:
DESIGNED BY:
DESIGN SUPERVISOR:

PRINTED ON: 4-AUG-2026 12:37 PRINTED BY: bwolfe PIN: XXXXXX

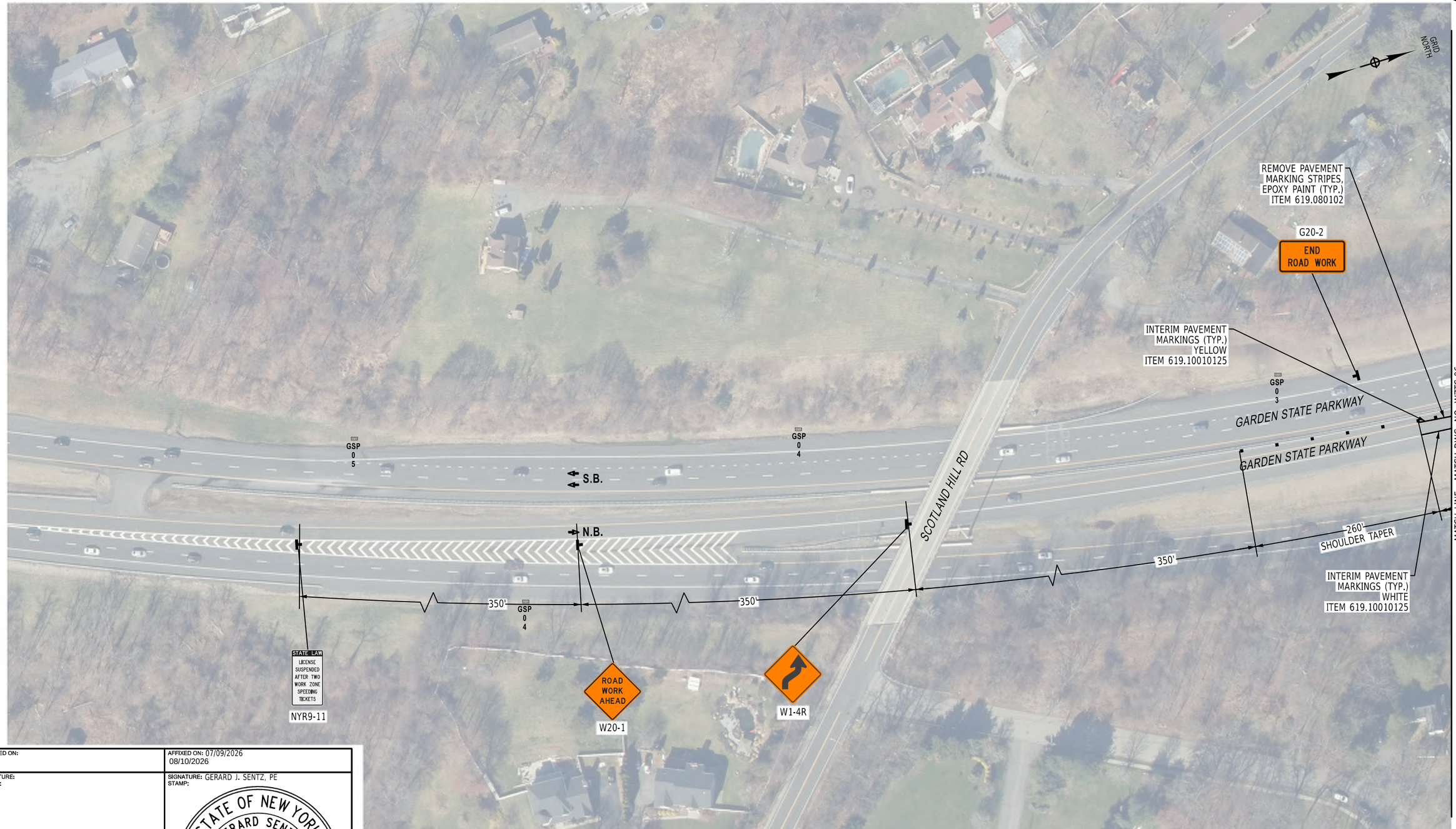

CHECKED BY:
DRAFTED BY:
CHECKED BY:
DESIGNED BY:
DESIGN SUPERVISOR:

PRINTED ON: 4-AUG-2026 12:38 PRINTED BY: bwolfe PIN: XXXXXX

ALTERED ON:	AFFIXED ON: 07/09/2026 08/10/2026
SIGNATURE: STAMP:	SIGNATURE: GERARD J. SENTZ, PE STAMP:

STATE OF NEW YORK
GERARD SENTZ
062576
LICENSED PROFESSIONAL ENGINEER

IT IS A VIOLATION OF LAW FOR ANY PERSON, UNLESS THEY ARE ACTING UNDER THE DIRECTION OF A LICENSED PROFESSIONAL ENGINEER, ARCHITECT, LANDSCAPE ARCHITECT, OR LAND SURVEYOR, TO ALTER AN ITEM IN ANY WAY. IF AN ITEM BEARING THE STAMP OF A LICENSED PROFESSIONAL IS ALTERED, THE ALTERING ENGINEER, ARCHITECT, LANDSCAPE ARCHITECT, OR LAND SURVEYOR SHALL STAMP THE DOCUMENT AND INCLUDE THE NOTATION "ALTERED BY" FOLLOWED BY THEIR SIGNATURE, THE DATE OF SUCH ALTERATION, AND A SPECIFIC DESCRIPTION OF THE ALTERATION.

REVISIONS

DATE	DESCRIPTION	BY	SYM.

NEW YORK STATE | Thruway Authority

AZAR DESIGN CO

TITLE OF PROJECT
SUPERSTRUCTURE REPLACEMENT
GSP CONNECTOR OVER NYS THRUWAY

LOCATION OF PROJECT
BIN 5514049 (MP 23.53)

TITLE OF DRAWING
PRE-STAGE II
WORK ZONE TRAFFIC CONTROL PLAN

CONTRACT NUMBER: TANY 26-23B

DATE: JULY 2026

DRAWING NUMBER: WZTC-05

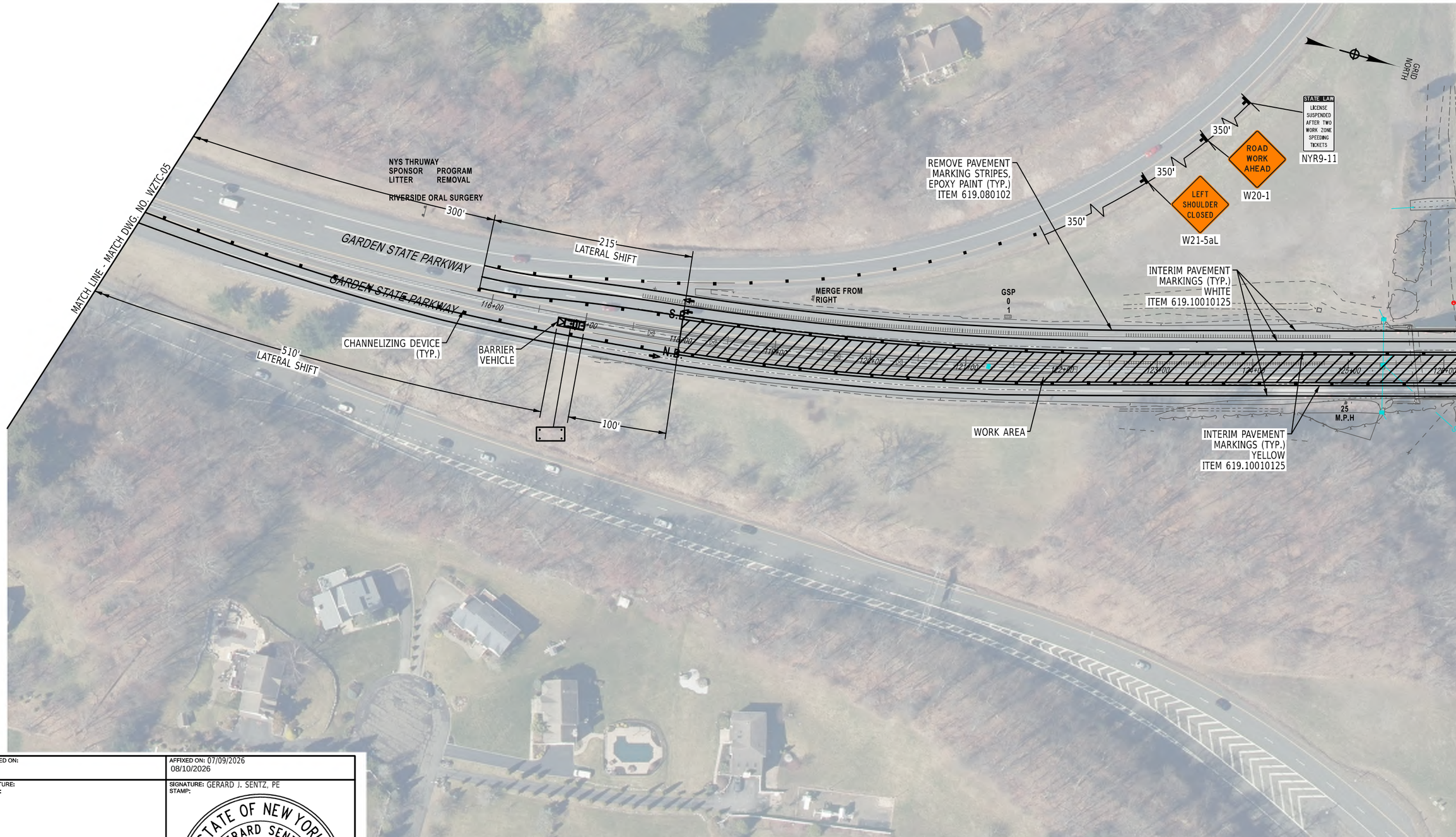

ALTERED ON:	AFFIXED ON: 07/09/2026 08/10/2026
SIGNATURE: STAMP:	SIGNATURE: GERARD J. SENTZ, PE STAMP:

STATE OF NEW YORK
GERARD SENTZ
062576
LICENSED PROFESSIONAL ENGINEER

IT IS A VIOLATION OF LAW FOR ANY PERSON, UNLESS THEY ARE ACTING UNDER THE DIRECTION OF A LICENSED PROFESSIONAL ENGINEER, ARCHITECT, LANDSCAPE ARCHITECT, OR LAND SURVEYOR, TO ALTER AN ITEM IN ANY WAY. IF AN ITEM BEARING THE STAMP OF A LICENSED PROFESSIONAL IS ALTERED, THE ALTERING ENGINEER, ARCHITECT, LANDSCAPE ARCHITECT, OR LAND SURVEYOR SHALL STAMP THE DOCUMENT AND INCLUDE THE NOTATION "ALTERED BY" FOLLOWED BY THEIR SIGNATURE, THE DATE OF SUCH ALTERATION, AND A SPECIFIC DESCRIPTION OF THE ALTERATION.

REVISIONS

DATE	DESCRIPTION	BY	SYM.

NEW YORK STATE | Thruway Authority

AZAR DESIGN CO

TITLE OF PROJECT
SUPERSTRUCTURE REPLACEMENT
GSP CONNECTOR OVER NYS THRUWAY

LOCATION OF PROJECT
BIN 5514049 (MP 23.53)

TITLE OF DRAWING
PRE-STAGE II
WORK ZONE TRAFFIC CONTROL PLAN

CONTRACT NUMBER: TANY 26-23B

DATE: JULY 2026

DRAWING NUMBER: WZTC-06

CHECKED BY:
DRAFTED BY:
CHECKED BY:
DESIGNED BY:
DESIGN SUPERVISOR:

PIN: XXXXXX
PRINTED BY: bwolfe
PRINTED ON: 4-AUG-2026 12:38

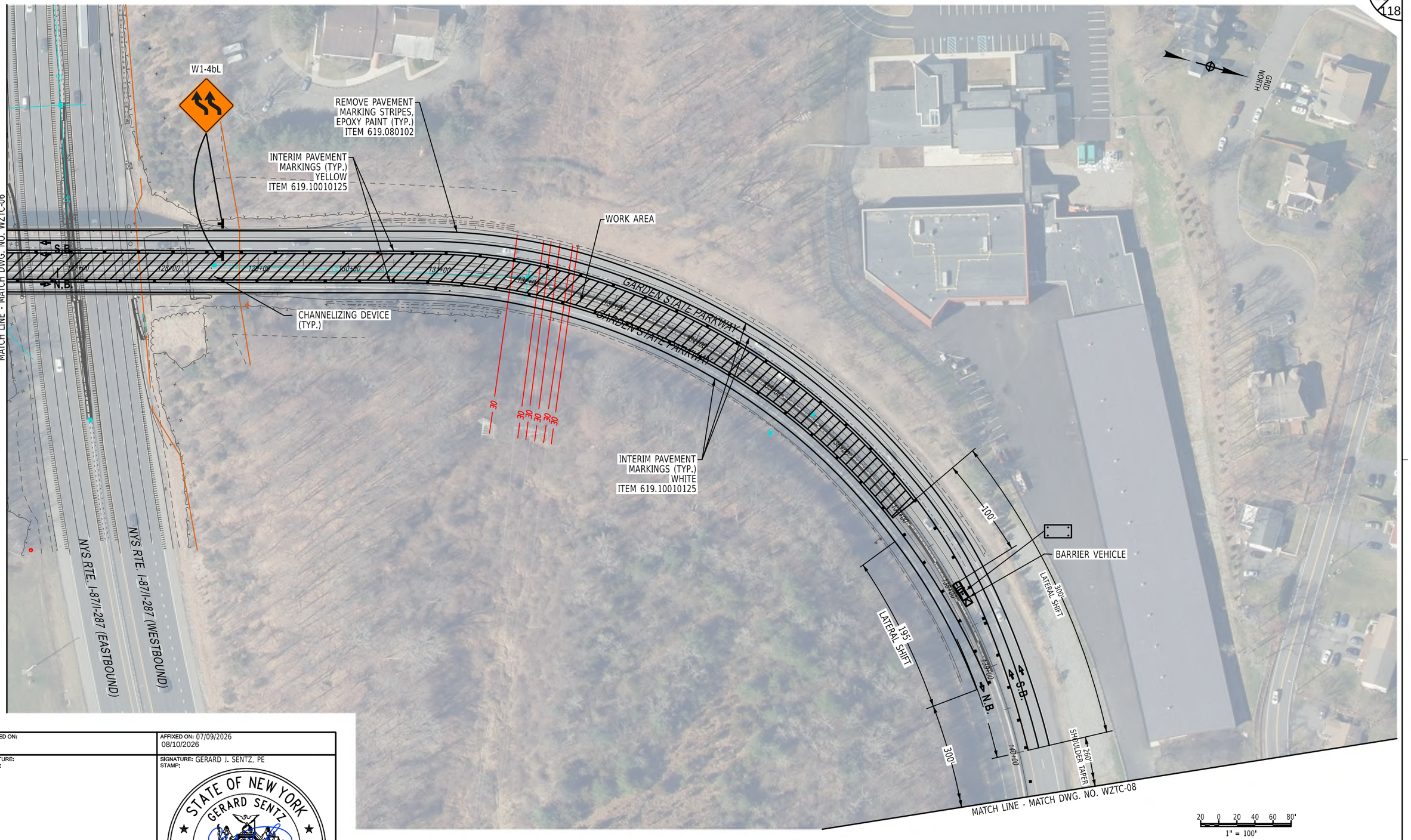

ALTERED ON:	AFFIXED ON: 07/09/2026 08/10/2026
SIGNATURE: STAMP:	SIGNATURE: GERARD J. SENTZ, PE STAMP: STATE OF NEW YORK · GERARD SENTZ · 062576 · LICENSED PROFESSIONAL ENGINEER

IT IS A VIOLATION OF LAW FOR ANY PERSON, UNLESS THEY ARE ACTING UNDER THE DIRECTION OF A LICENSED PROFESSIONAL ENGINEER, ARCHITECT, LANDSCAPE ARCHITECT, OR LAND SURVEYOR, TO ALTER AN ITEM IN ANY WAY. IF AN ITEM BEARING THE STAMP OF A LICENSED PROFESSIONAL IS ALTERED, THE ALTERING ENGINEER, ARCHITECT, LANDSCAPE ARCHITECT, OR LAND SURVEYOR SHALL STAMP THE DOCUMENT AND INCLUDE THE NOTATION "ALTERED BY" FOLLOWED BY THEIR SIGNATURE, THE DATE OF SUCH ALTERATION, AND A SPECIFIC DESCRIPTION OF THE ALTERATION.

REVISIONS

DATE	DESCRIPTION	BY	SYM.

NEW YORK STATE Thruway Authority

AZAR DESIGN CO

TITLE OF PROJECT
SUPERSTRUCTURE REPLACEMENT
GSP CONNECTOR OVER NYS THRUWAY

LOCATION OF PROJECT
BIN 5514049 (MP 23.53)

TITLE OF DRAWING
PRE-STAGE II WORK ZONE TRAFFIC CONTROL PLAN

CONTRACT NUMBER: TANY 26-23B

DATE: JULY 2026

DRAWING NUMBER: WZTC-07

CHECKED BY:
DRAFTED BY:
CHECKED BY:
DESIGNED BY:
DESIGN SUPERVISOR:

PRINTED ON: 4-AUG-2026 12:38 PRINTED BY: bwolfe PIN: XXXXXX

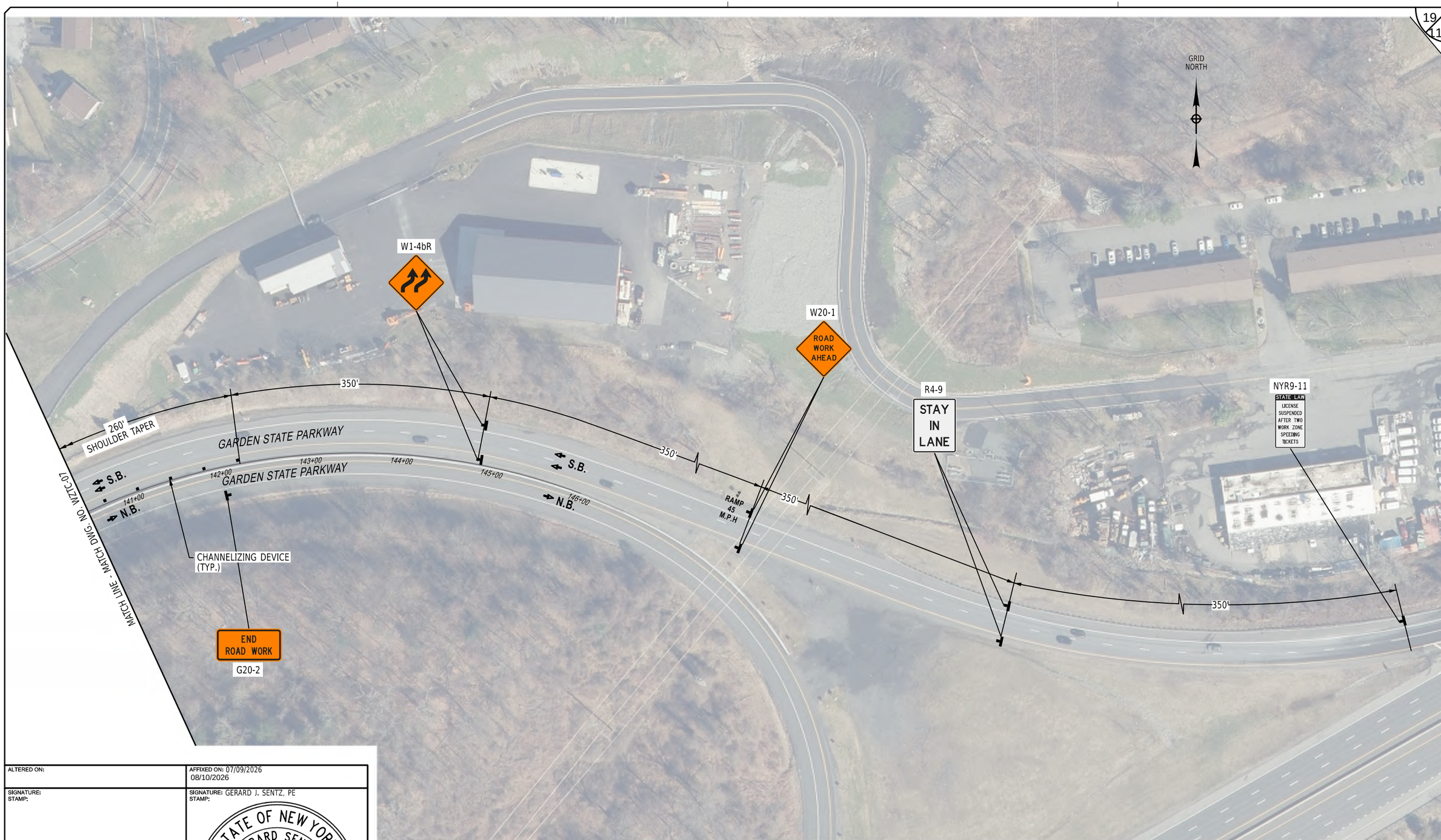

ALTERED ON:	AFFIXED ON: 07/09/2026 08/10/2026
SIGNATURE: STAMP:	SIGNATURE: GERARD J. SENTZ, PE STAMP:

STATE OF NEW YORK
GERARD SENTZ
REGISTERED
062576
LICENSED PROFESSIONAL ENGINEER

IT IS A VIOLATION OF LAW FOR ANY PERSON, UNLESS THEY ARE ACTING UNDER THE DIRECTION OF A LICENSED PROFESSIONAL ENGINEER, ARCHITECT, LANDSCAPE ARCHITECT, OR LAND SURVEYOR, TO ALTER AN ITEM IN ANY WAY. IF AN ITEM BEARING THE STAMP OF A LICENSED PROFESSIONAL IS ALTERED, THE ALTERING ENGINEER, ARCHITECT, LANDSCAPE ARCHITECT, OR LAND SURVEYOR SHALL STAMP THE DOCUMENT AND INCLUDE THE NOTATION "ALTERED BY" FOLLOWED BY THEIR SIGNATURE, THE DATE OF SUCH ALTERATION, AND A SPECIFIC DESCRIPTION OF THE ALTERATION.

REVISIONS

DATE	DESCRIPTION	BY	SYM.

NEW YORK STATE | Thruway Authority

AZAR DESIGN CO

TITLE OF PROJECT
SUPERSTRUCTURE REPLACEMENT
GSP CONNECTOR OVER NYS THRUWAY

LOCATION OF PROJECT
BIN 5514049 (MP 23.53)

TITLE OF DRAWING
PRE-STAGE II
WORK ZONE TRAFFIC CONTROL PLAN

CONTRACT NUMBER: TANY 26-23B

DATE: JULY 2026

DRAWING NUMBER: WZTC-08

CHECKED BY:
DRAFTED BY:
CHECKED BY:
DESIGNED BY:
DESIGN SUPERVISOR:

PRINTED ON: 4-AUG-2026 12:38 PRINTED BY: bwolfe PIN: XXXXXX

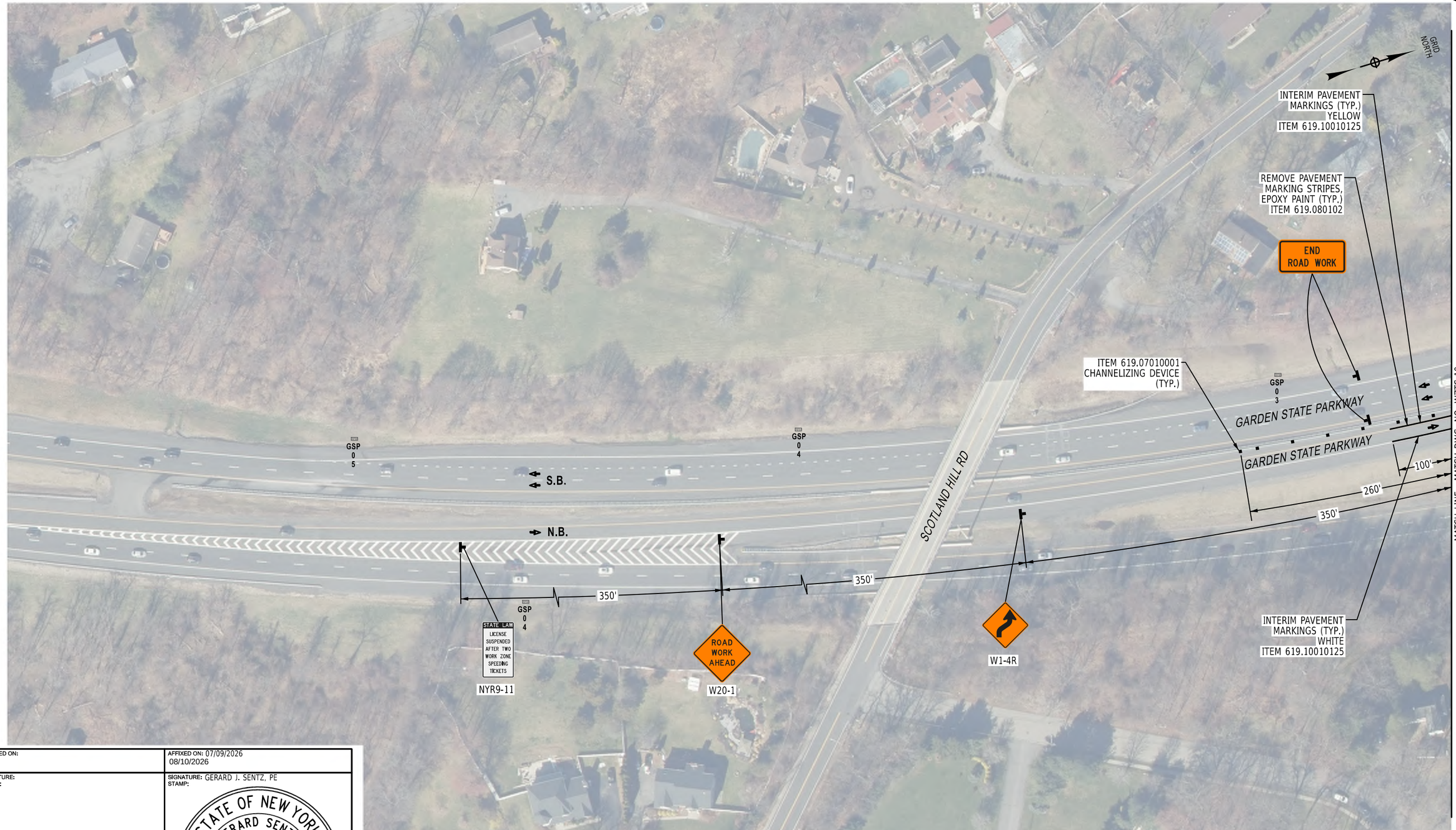

ALTERED ON:	AFFIXED ON: 07/09/2026 08/10/2026
SIGNATURE: STAMP:	SIGNATURE: GERARD J. SENTZ, PE STAMP:

STATE OF NEW YORK
GERARD SENTZ
062576
LICENSED PROFESSIONAL ENGINEER

IT IS A VIOLATION OF LAW FOR ANY PERSON, UNLESS THEY ARE ACTING UNDER THE DIRECTION OF A LICENSED PROFESSIONAL ENGINEER, ARCHITECT, LANDSCAPE ARCHITECT, OR LAND SURVEYOR, TO ALTER AN ITEM IN ANY WAY. IF AN ITEM BEARING THE STAMP OF A LICENSED PROFESSIONAL IS ALTERED, THE ALTERING ENGINEER, ARCHITECT, LANDSCAPE ARCHITECT, OR LAND SURVEYOR SHALL STAMP THE DOCUMENT AND INCLUDE THE NOTATION "ALTERED BY" FOLLOWED BY THEIR SIGNATURE, THE DATE OF SUCH ALTERATION, AND A SPECIFIC DESCRIPTION OF THE ALTERATION.

REVISIONS

DATE	DESCRIPTION	BY	SYM.

NEW YORK STATE | Thruway Authority

AZAR DESIGN CO

TITLE OF PROJECT
SUPERSTRUCTURE REPLACEMENT
GSP CONNECTOR OVER NYS THRUWAY

LOCATION OF PROJECT
BIN 5514049 (MP 23.53)

TITLE OF DRAWING
STAGE I
WORK ZONE TRAFFIC CONTROL PLAN

CONTRACT NUMBER: TANY 26-23B

DATE: JULY 2026

DRAWING NUMBER: WZTC-09

CHECKED BY:
DRAFTED BY:
CHECKED BY:
DESIGNED BY:
DESIGN SUPERVISOR:
PIN: XXXXXX
PRINTED BY: bwolfe
PRINTED ON: 4-AUG-2026 12:38

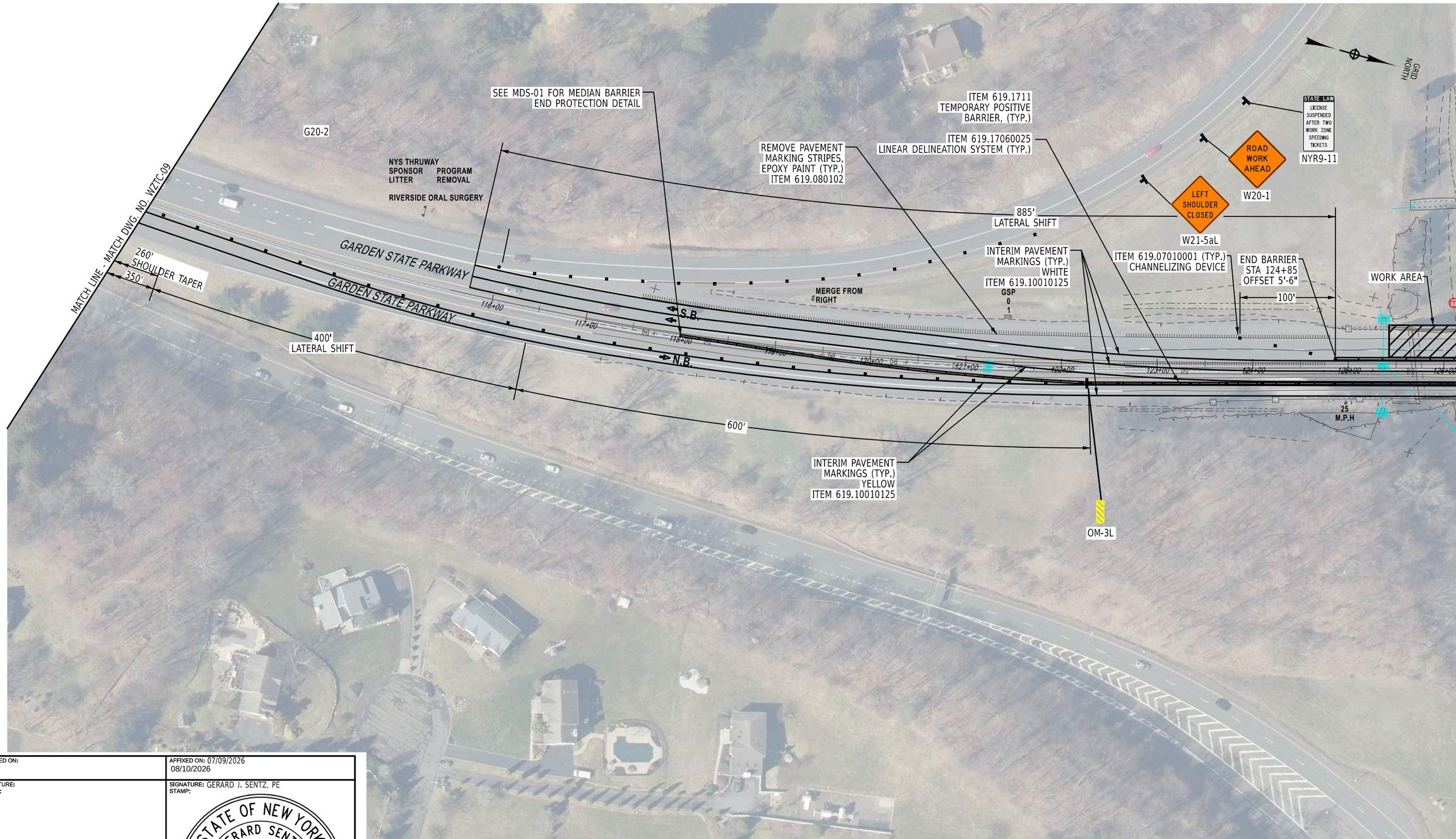

CHECKED BY:
DRAFTED BY:
CHECKED BY:
DESIGNED BY:
DESIGN SUPERVISOR:

PRINTED ON: 4-AUG-2026 13:02 PRINTED BY: bwolfe PN: XXXXXX

ALTERED ON:	AFFIXED ON: 07/09/2026 08/10/2026
SIGNATURE: STAMP:	SIGNATURE: GERARD J. SENTZ, PE STAMP: STATE OF NEW YORK · GERARD SENTZ · 062576 · LICENSED PROFESSIONAL ENGINEER

IT IS A VIOLATION OF LAW FOR ANY PERSON, UNLESS THEY ARE ACTING UNDER THE DIRECTION OF A LICENSED PROFESSIONAL ENGINEER, ARCHITECT, LANDSCAPE ARCHITECT, OR LAND SURVEYOR, TO ALTER AN ITEM IN ANY WAY. IF AN ITEM BEARING THE STAMP OF A LICENSED PROFESSIONAL IS ALTERED, THE ALTERING ENGINEER, ARCHITECT, LANDSCAPE ARCHITECT, OR LAND SURVEYOR SHALL STAMP THE DOCUMENT AND INCLUDE THE NOTATION "ALTERED BY" FOLLOWED BY THEIR SIGNATURE, THE DATE OF SUCH ALTERATION, AND A SPECIFIC DESCRIPTION OF THE ALTERATION.

REVISIONS

DATE	DESCRIPTION	BY	SYM.

NEW YORK STATE | Thruway Authority

AZAR DESIGN CO
SHAPING TOMORROW TOGETHER

TITLE OF PROJECT
SUPERSTRUCTURE REPLACEMENT
GSP CONNECTOR OVER NYS THRUWAY

LOCATION OF PROJECT
BIN 5514049 (MP 23.53)

TITLE OF DRAWING
STAGE I
WORK ZONE TRAFFIC CONTROL PLAN

CONTRACT NUMBER: TANY 26-23B

DATE: JULY 2026

DRAWING NUMBER: WZTC-10

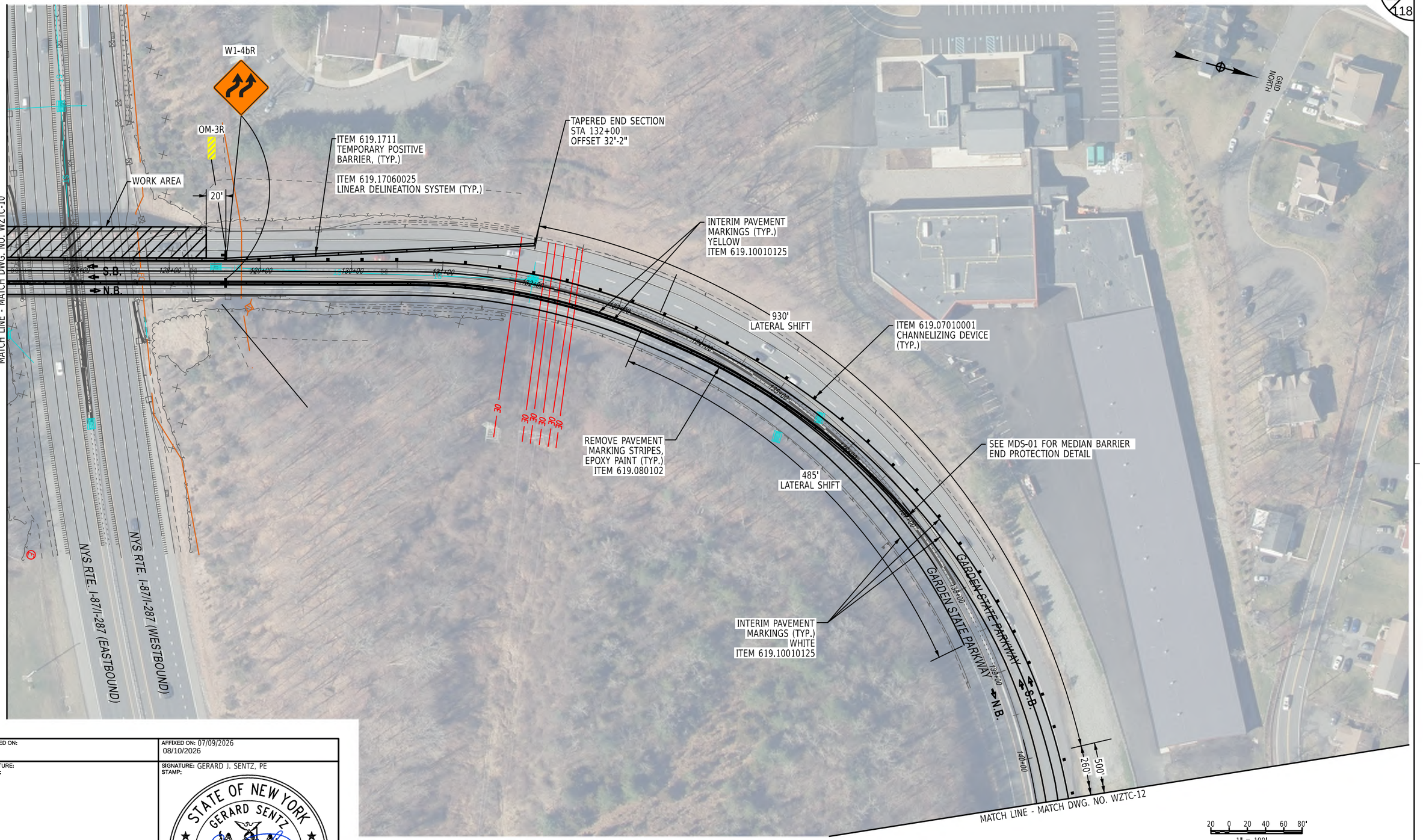

CHECKED BY:

DRAFTED BY:

CHECKED BY:

DESIGNED BY:

DESIGN SUPERVISOR:

PRINTED ON: 4-AUG-2026 12:38 PRINTED BY: bwolfe PIN: XXXXXX

ALTERED ON:	AFFIXED ON: 07/09/2026 08/10/2026
SIGNATURE: STAMP:	SIGNATURE: GERARD J. SENTZ, PE STAMP: STATE OF NEW YORK · GERARD SENTZ · 062576 · LICENSED PROFESSIONAL ENGINEER

IT IS A VIOLATION OF LAW FOR ANY PERSON, UNLESS THEY ARE ACTING UNDER THE DIRECTION OF A LICENSED PROFESSIONAL ENGINEER, ARCHITECT, LANDSCAPE ARCHITECT, OR LAND SURVEYOR, TO ALTER AN ITEM IN ANY WAY. IF AN ITEM BEARING THE STAMP OF A LICENSED PROFESSIONAL IS ALTERED, THE ALTERING ENGINEER, ARCHITECT, LANDSCAPE ARCHITECT, OR LAND SURVEYOR SHALL STAMP THE DOCUMENT AND INCLUDE THE NOTATION "ALTERED BY" FOLLOWED BY THEIR SIGNATURE, THE DATE OF SUCH ALTERATION, AND A SPECIFIC DESCRIPTION OF THE ALTERATION.

REVISIONS

DATE	DESCRIPTION	BY	SYM.

NEW YORK STATE Thruway Authority

AZAR DESIGN CO

TITLE OF PROJECT
SUPERSTRUCTURE REPLACEMENT
GSP CONNECTOR OVER NYS THRUWAY

LOCATION OF PROJECT
BIN 5514049 (MP 23.53)

TITLE OF DRAWING
STAGE I
WORK ZONE TRAFFIC CONTROL PLAN

CONTRACT NUMBER: TANY 26-23B

DATE: JULY 2026

DRAWING NUMBER: WZTC-11

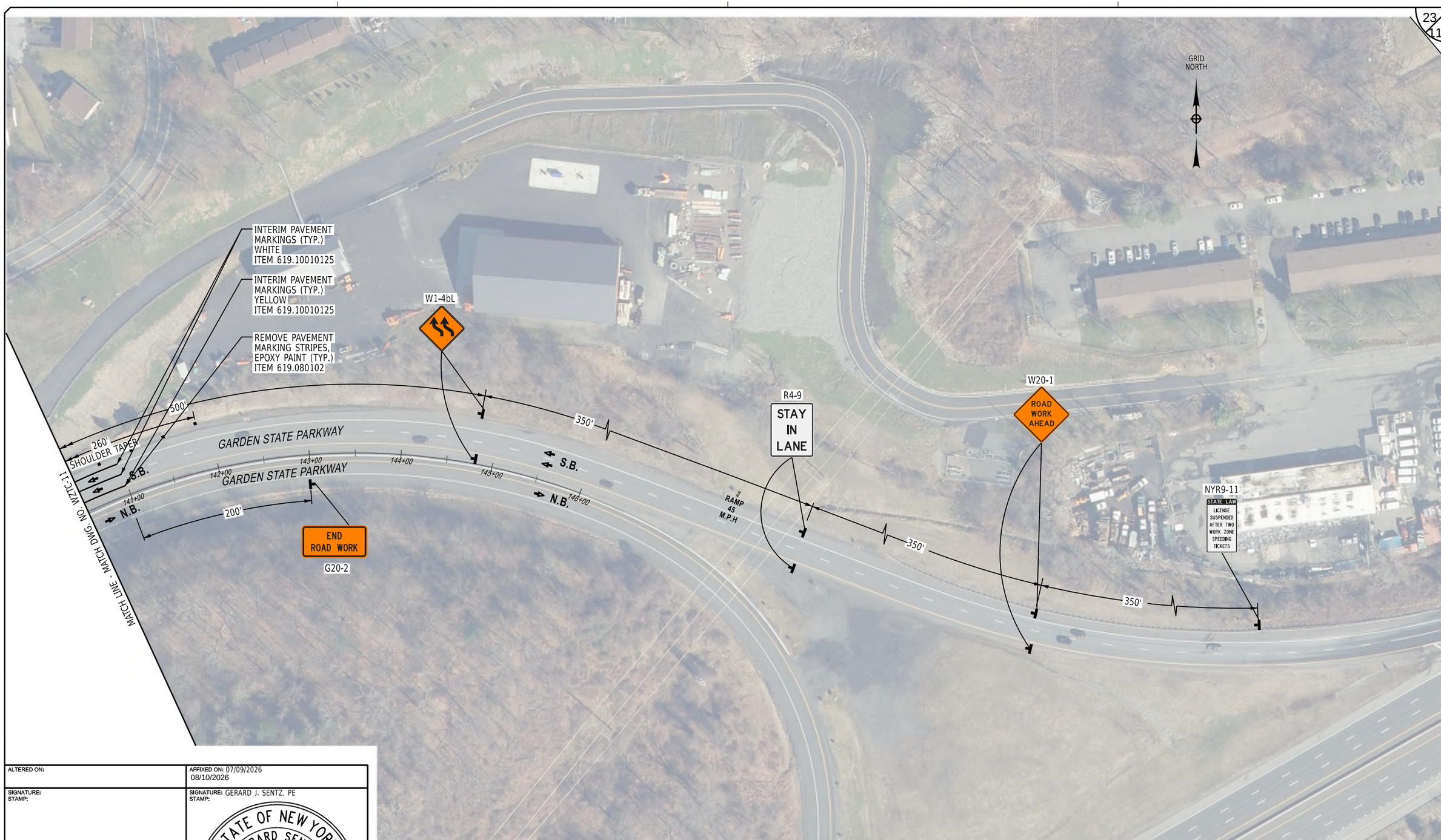

ALTERED ON:	AFFIXED ON: 07/09/2026 08/10/2026
SIGNATURE: STAMP:	SIGNATURE: GERARD J. SENTZ, PE STAMP:

STATE OF NEW YORK
GERARD SENTZ
062576
LICENSED PROFESSIONAL ENGINEER

IT IS A VIOLATION OF LAW FOR ANY PERSON, UNLESS THEY ARE ACTING UNDER THE DIRECTION OF A LICENSED PROFESSIONAL ENGINEER, ARCHITECT, LANDSCAPE ARCHITECT, OR LAND SURVEYOR, TO ALTER AN ITEM IN ANY WAY. IF AN ITEM BEARING THE STAMP OF A LICENSED PROFESSIONAL IS ALTERED, THE ALTERING ENGINEER, ARCHITECT, LANDSCAPE ARCHITECT, OR LAND SURVEYOR SHALL STAMP THE DOCUMENT AND INCLUDE THE NOTATION "ALTERED BY" FOLLOWED BY THEIR SIGNATURE, THE DATE OF SUCH ALTERATION, AND A SPECIFIC DESCRIPTION OF THE ALTERATION.

REVISIONS

DATE	DESCRIPTION	BY	SYM.

NEW YORK STATE | Thruway Authority

AZAR DESIGN CO

TITLE OF PROJECT
SUPERSTRUCTURE REPLACEMENT
GSP CONNECTOR OVER NYS THRUWAY

LOCATION OF PROJECT
BIN 5514049 (MP 23.53)

TITLE OF DRAWING
STAGE I
WORK ZONE TRAFFIC CONTROL PLAN

CONTRACT NUMBER: TANY 26-23B

DATE: JULY 2026

DRAWING NUMBER: WZTC-12

CHECKED BY:
DRAFTED BY:
CHECKED BY:
DESIGNED BY:
DESIGN SUPERVISOR:

PRINTED ON: 4-AUG-2026 12:38 PRINTED BY: bwalls PIN: XXXXXX

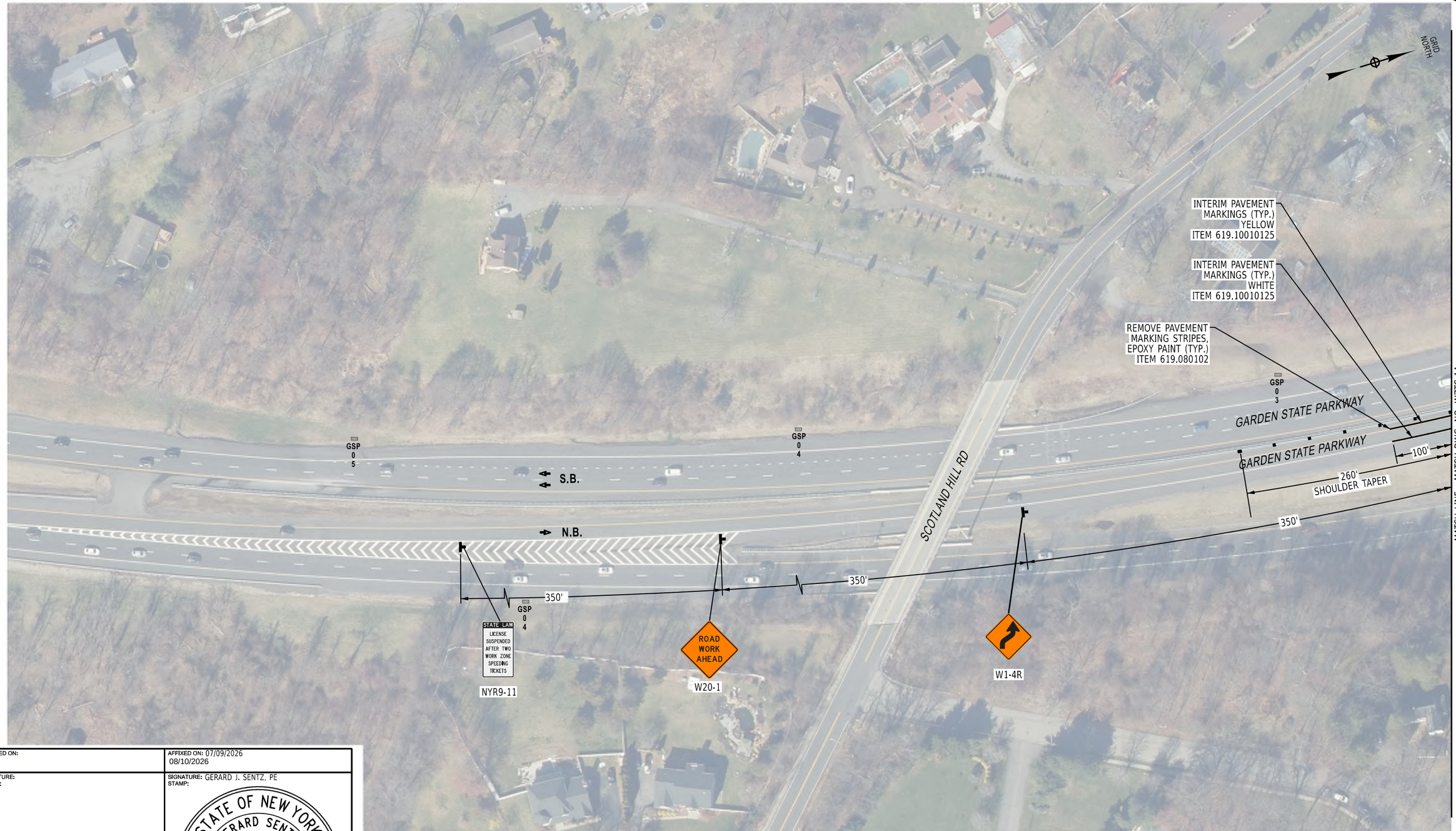

ALTERED ON:	AFFIXED ON: 07/09/2026 08/10/2026
SIGNATURE: STAMP:	SIGNATURE: GERARD J. SENTZ, PE STAMP:

STATE OF NEW YORK
GERARD SENTZ
062576
LICENSED PROFESSIONAL ENGINEER

IT IS A VIOLATION OF LAW FOR ANY PERSON, UNLESS THEY ARE ACTING UNDER THE DIRECTION OF A LICENSED PROFESSIONAL ENGINEER, ARCHITECT, LANDSCAPE ARCHITECT, OR LAND SURVEYOR, TO ALTER AN ITEM IN ANY WAY. IF AN ITEM BEARING THE STAMP OF A LICENSED PROFESSIONAL IS ALTERED, THE ALTERING ENGINEER, ARCHITECT, LANDSCAPE ARCHITECT, OR LAND SURVEYOR SHALL STAMP THE DOCUMENT AND INCLUDE THE NOTATION "ALTERED BY" FOLLOWED BY THEIR SIGNATURE, THE DATE OF SUCH ALTERATION, AND A SPECIFIC DESCRIPTION OF THE ALTERATION.

REVISIONS

DATE	DESCRIPTION	BY	SYM.

NEW YORK STATE Thruway Authority

AZAR DESIGN CO

TITLE OF PROJECT
SUPERSTRUCTURE REPLACEMENT
GSP CONNECTOR OVER NYS THRUWAY

LOCATION OF PROJECT
BIN 5514049 (MP 23.53)

TITLE OF DRAWING
STAGE II
WORK ZONE TRAFFIC CONTROL PLAN

CONTRACT NUMBER: TANY 26-23B

DATE: JULY 2026

DRAWING NUMBER: WZTC-13

CHECKED BY:
DRAFTED BY:
CHECKED BY:
DESIGNED BY:
DESIGN SUPERVISOR:

PRINTED ON: 4-AUG-2026 12:38 PRINTED BY: bwolfe PIN: XXXXXX

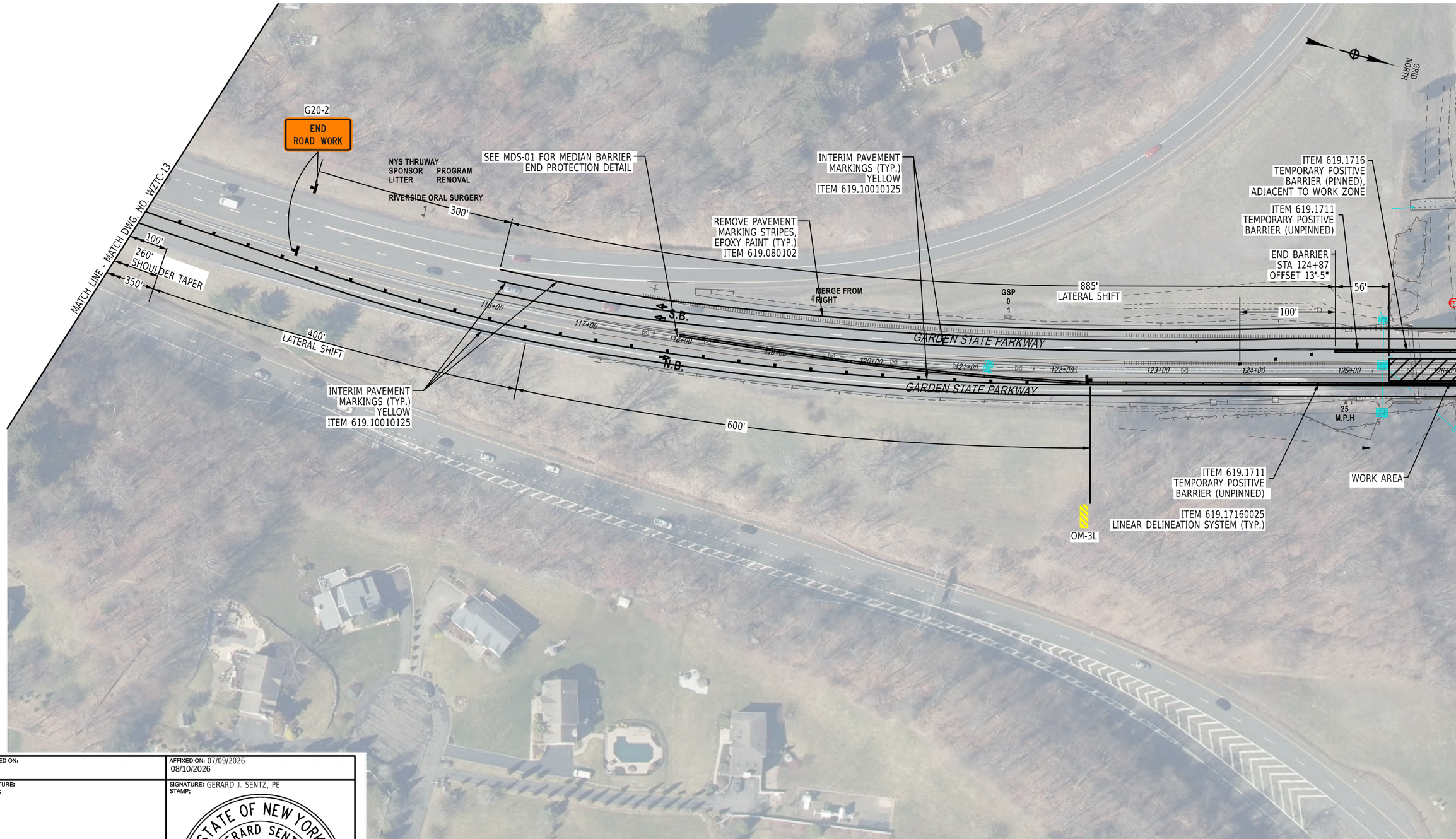

CHECKED BY:
DRAFTED BY:
CHECKED BY:
DESIGNED BY:
DESIGN SUPERVISOR:

PRINTED ON: 4-AUG-2026 12:38 PRINTED BY: bwolfe PN: XXXXXX

ALTERED ON:	AFFIXED ON: 07/09/2026 08/10/2026
SIGNATURE: STAMP:	SIGNATURE: GERARD J. SENTZ, PE STAMP: STATE OF NEW YORK · GERARD SENTZ · 062576 · LICENSED PROFESSIONAL ENGINEER

IT IS A VIOLATION OF LAW FOR ANY PERSON, UNLESS THEY ARE ACTING UNDER THE DIRECTION OF A LICENSED PROFESSIONAL ENGINEER, ARCHITECT, LANDSCAPE ARCHITECT, OR LAND SURVEYOR, TO ALTER AN ITEM IN ANY WAY. IF AN ITEM BEARING THE STAMP OF A LICENSED PROFESSIONAL IS ALTERED, THE ALTERING ENGINEER, ARCHITECT, LANDSCAPE ARCHITECT, OR LAND SURVEYOR SHALL STAMP THE DOCUMENT AND INCLUDE THE NOTATION "ALTERED BY" FOLLOWED BY THEIR SIGNATURE, THE DATE OF SUCH ALTERATION, AND A SPECIFIC DESCRIPTION OF THE ALTERATION.

REVISIONS

DATE	DESCRIPTION	BY	SYM.

NEW YORK STATE | Thruway Authority

AZAR DESIGN CO

TITLE OF PROJECT: SUPERSTRUCTURE REPLACEMENT GSP CONNECTOR OVER NYS THRUWAY

LOCATION OF PROJECT: BIN 5514049 (MP 23.53)

TITLE OF DRAWING: **STAGE II WORK ZONE TRAFFIC CONTROL PLAN**

CONTRACT NUMBER: TANY 26-23B

DATE: JULY 2026

DRAWING NUMBER: WZTC-14

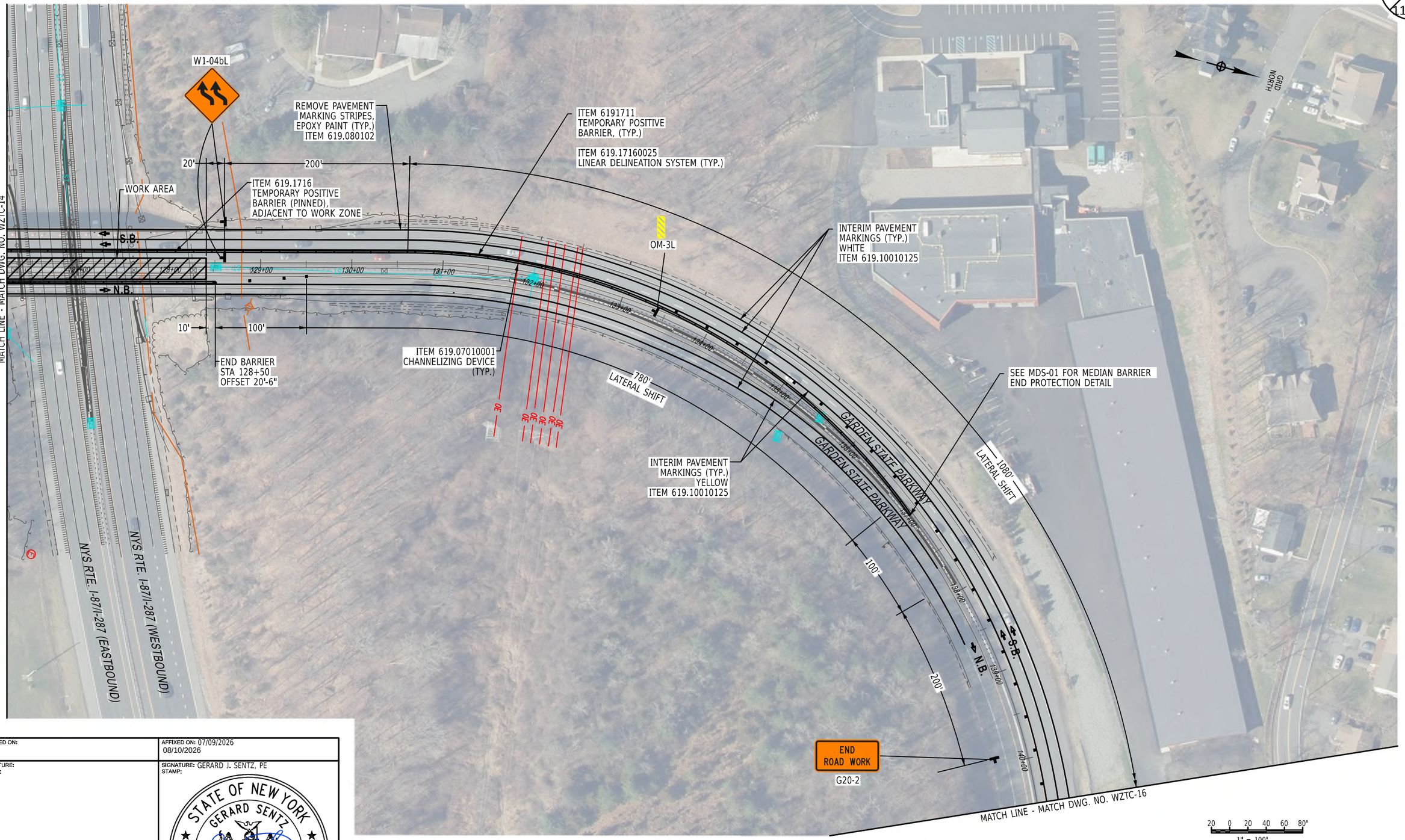

CHECKED BY:
DRAFTED BY:
CHECKED BY:
DESIGNED BY:
DESIGN SUPERVISOR:

PRINTED ON: 4-AUG-2026 12:38 PRINTED BY: bvcollis PIN: XXXXXX

ALTERED ON:	AFFIXED ON: 07/09/2026 08/10/2026
SIGNATURE: STAMP:	SIGNATURE: GERARD J. SENTZ, PE STAMP: STATE OF NEW YORK · GERARD SENTZ · 062576 · LICENSED PROFESSIONAL ENGINEER

IT IS A VIOLATION OF LAW FOR ANY PERSON, UNLESS THEY ARE ACTING UNDER THE DIRECTION OF A LICENSED PROFESSIONAL ENGINEER, ARCHITECT, LANDSCAPE ARCHITECT, OR LAND SURVEYOR, TO ALTER AN ITEM IN ANY WAY. IF AN ITEM BEARING THE STAMP OF A LICENSED PROFESSIONAL IS ALTERED, THE ALTERING ENGINEER, ARCHITECT, LANDSCAPE ARCHITECT, OR LAND SURVEYOR SHALL STAMP THE DOCUMENT AND INCLUDE THE NOTATION "ALTERED BY" FOLLOWED BY THEIR SIGNATURE, THE DATE OF SUCH ALTERATION, AND A SPECIFIC DESCRIPTION OF THE ALTERATION.

REVISIONS

DATE	DESCRIPTION	BY	SYM.

NEW YORK STATE Thruway Authority

AZAR DESIGN CO

TITLE OF PROJECT
SUPERSTRUCTURE REPLACEMENT
GSP CONNECTOR OVER NYS THRUWAY

LOCATION OF PROJECT
BIN 5514049 (MP 23.53)

TITLE OF DRAWING
STAGE II
WORK ZONE TRAFFIC CONTROL PLAN

CONTRACT NUMBER: TANY 26-23B

DATE: JULY 2026

DRAWING NUMBER: WZTC-15

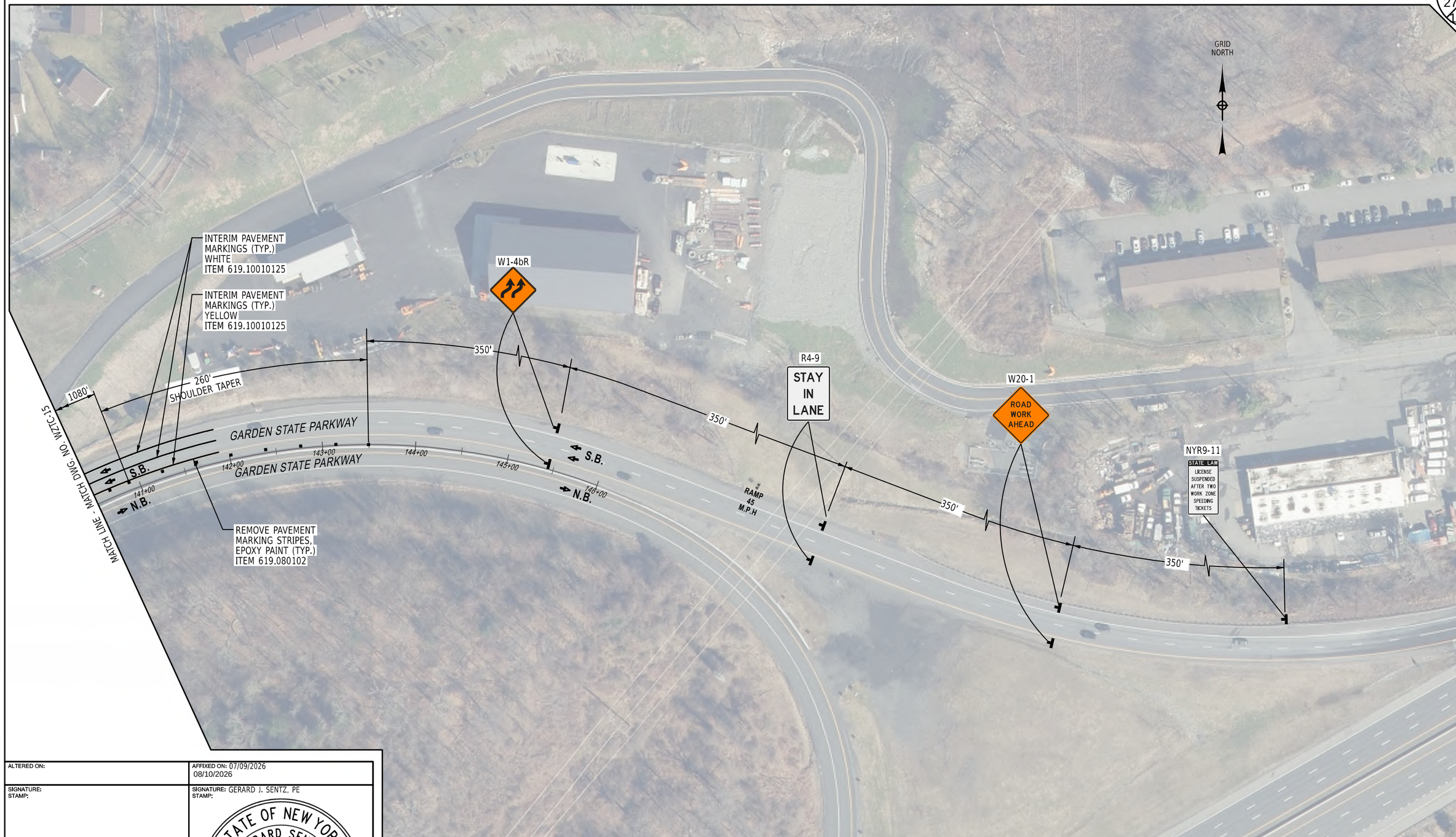

CHECKED BY:
DRAFTED BY:
CHECKED BY:
DESIGNED BY:
DESIGN SUPERVISOR:

PRINTED ON: 4-AUG-2026 12:38 PRINTED BY: bwolfe PIN: XXXXXX

ALTERED ON:	AFFIXED ON: 07/09/2026 08/10/2026
SIGNATURE: STAMP:	SIGNATURE: GERARD J. SENTZ, PE STAMP:

STATE OF NEW YORK
GERARD SENTZ
062576
LICENSED PROFESSIONAL ENGINEER

IT IS A VIOLATION OF LAW FOR ANY PERSON, UNLESS THEY ARE ACTING UNDER THE DIRECTION OF A LICENSED PROFESSIONAL ENGINEER, ARCHITECT, LANDSCAPE ARCHITECT, OR LAND SURVEYOR, TO ALTER AN ITEM IN ANY WAY. IF AN ITEM BEARING THE STAMP OF A LICENSED PROFESSIONAL IS ALTERED, THE ALTERING ENGINEER, ARCHITECT, LANDSCAPE ARCHITECT, OR LAND SURVEYOR SHALL STAMP THE DOCUMENT AND INCLUDE THE NOTATION "ALTERED BY" FOLLOWED BY THEIR SIGNATURE, THE DATE OF SUCH ALTERATION, AND A SPECIFIC DESCRIPTION OF THE ALTERATION.

REVISIONS

DATE	DESCRIPTION	BY	SYM.

NEW YORK STATE | Thruway Authority

AZAR DESIGN CO

TITLE OF PROJECT
SUPERSTRUCTURE REPLACEMENT
GSP CONNECTOR OVER NYS THRUWAY

LOCATION OF PROJECT
BIN 5514049 (MP 23.53)

TITLE OF DRAWING
STAGE II
WORK ZONE TRAFFIC CONTROL PLAN

CONTRACT NUMBER: TANY 26-23B

DATE: JULY 2026

DRAWING NUMBER: WZTC-16

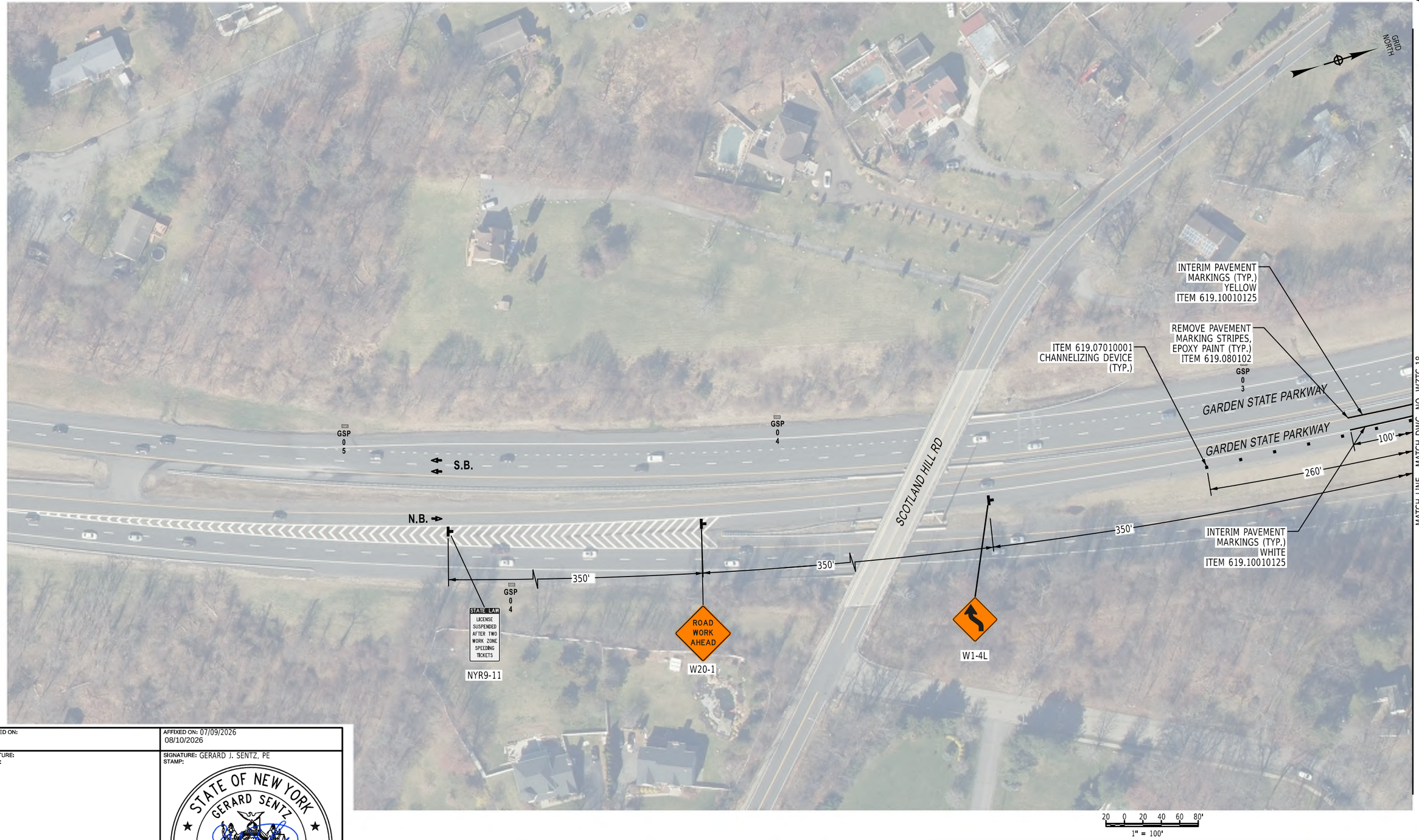

ALTERED ON:	AFFIXED ON: 07/09/2026 08/10/2026
SIGNATURE: STAMP:	SIGNATURE: GERARD J. SENTZ, PE STAMP: STATE OF NEW YORK · GERARD SENTZ · 062576 · LICENSED PROFESSIONAL ENGINEER

IT IS A VIOLATION OF LAW FOR ANY PERSON, UNLESS THEY ARE ACTING UNDER THE DIRECTION OF A LICENSED PROFESSIONAL ENGINEER, ARCHITECT, LANDSCAPE ARCHITECT, OR LAND SURVEYOR, TO ALTER AN ITEM IN ANY WAY. IF AN ITEM BEARING THE STAMP OF A LICENSED PROFESSIONAL IS ALTERED, THE ALTERING ENGINEER, ARCHITECT, LANDSCAPE ARCHITECT, OR LAND SURVEYOR SHALL STAMP THE DOCUMENT AND INCLUDE THE NOTATION "ALTERED BY" FOLLOWED BY THEIR SIGNATURE, THE DATE OF SUCH ALTERATION, AND A SPECIFIC DESCRIPTION OF THE ALTERATION.

REVISIONS

DATE	DESCRIPTION	BY	SYM.

NEW YORK STATE | Thruway Authority

AZAR DESIGN CO

TITLE OF PROJECT: SUPERSTRUCTURE REPLACEMENT GSP CONNECTOR OVER NYS THRUWAY

LOCATION OF PROJECT: BIN 5514049 (MP 23.53)

TITLE OF DRAWING: STAGE III WORK ZONE TRAFFIC CONTROL PLAN

CONTRACT NUMBER: TANY 26-23B

DATE: JULY 2026

DRAWING NUMBER: WZTC-17

CHECKED BY:
DRAFTED BY:
CHECKED BY:
DESIGNED BY:
DESIGN SUPERVISOR:
PRINTED ON: 4-AUG-2026 12:39 PRINTED BY: bwolfe PN: XXXXXX

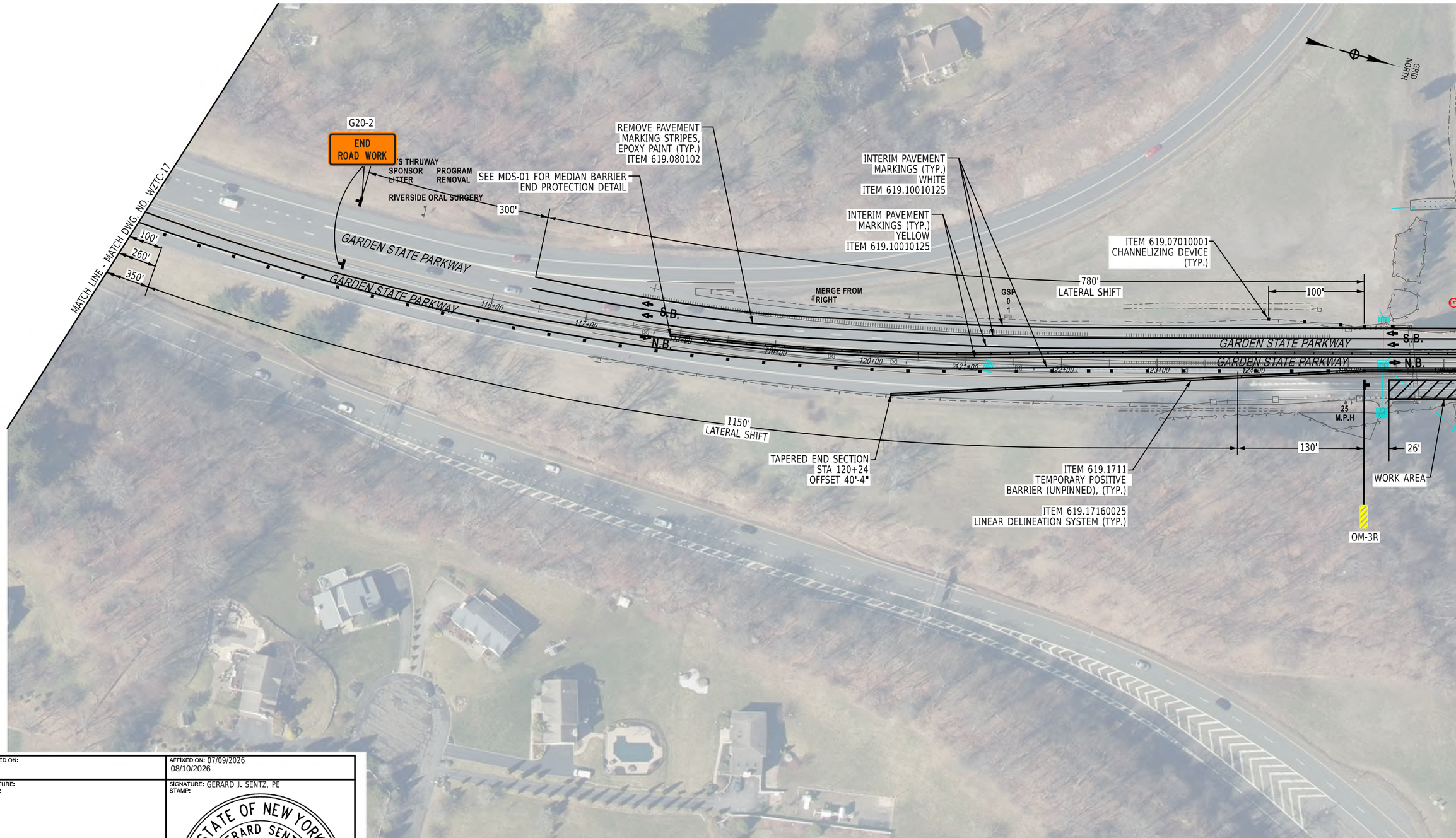

CHECKED BY:

DRAFTED BY:

DESIGNED BY:

DESIGN SUPERVISOR:

PRINTED ON: 4-AUG-2026 12:39 PRINTED BY: bwolfe PIN: XXXXXX

ALTERED ON:	AFFIXED ON: 07/09/2026 08/10/2026
SIGNATURE: STAMP:	SIGNATURE: GERARD J. SENTZ, PE STAMP:

STATE OF NEW YORK
GERARD SENTZ
062576
LICENSED PROFESSIONAL ENGINEER

IT IS A VIOLATION OF LAW FOR ANY PERSON, UNLESS THEY ARE ACTING UNDER THE DIRECTION OF A LICENSED PROFESSIONAL ENGINEER, ARCHITECT, LANDSCAPE ARCHITECT, OR LAND SURVEYOR, TO ALTER AN ITEM IN ANY WAY. IF AN ITEM BEARING THE STAMP OF A LICENSED PROFESSIONAL IS ALTERED, THE ALTERING ENGINEER, ARCHITECT, LANDSCAPE ARCHITECT, OR LAND SURVEYOR SHALL STAMP THE DOCUMENT AND INCLUDE THE NOTATION "ALTERED BY" FOLLOWED BY THEIR SIGNATURE, THE DATE OF SUCH ALTERATION, AND A SPECIFIC DESCRIPTION OF THE ALTERATION.

REVISIONS

DATE	DESCRIPTION	BY	SYM.

NEW YORK STATE | Thruway Authority

AZAR DESIGN CO

TITLE OF PROJECT
SUPERSTRUCTURE REPLACEMENT
GSP CONNECTOR OVER NYS THRUWAY

LOCATION OF PROJECT
BIN 5514049 (MP 23.53)

TITLE OF DRAWING
STAGE III
WORK ZONE TRAFFIC CONTROL PLAN

CONTRACT NUMBER: TANY 26-23B

DATE: JULY 2026

DRAWING NUMBER: WZTC-18

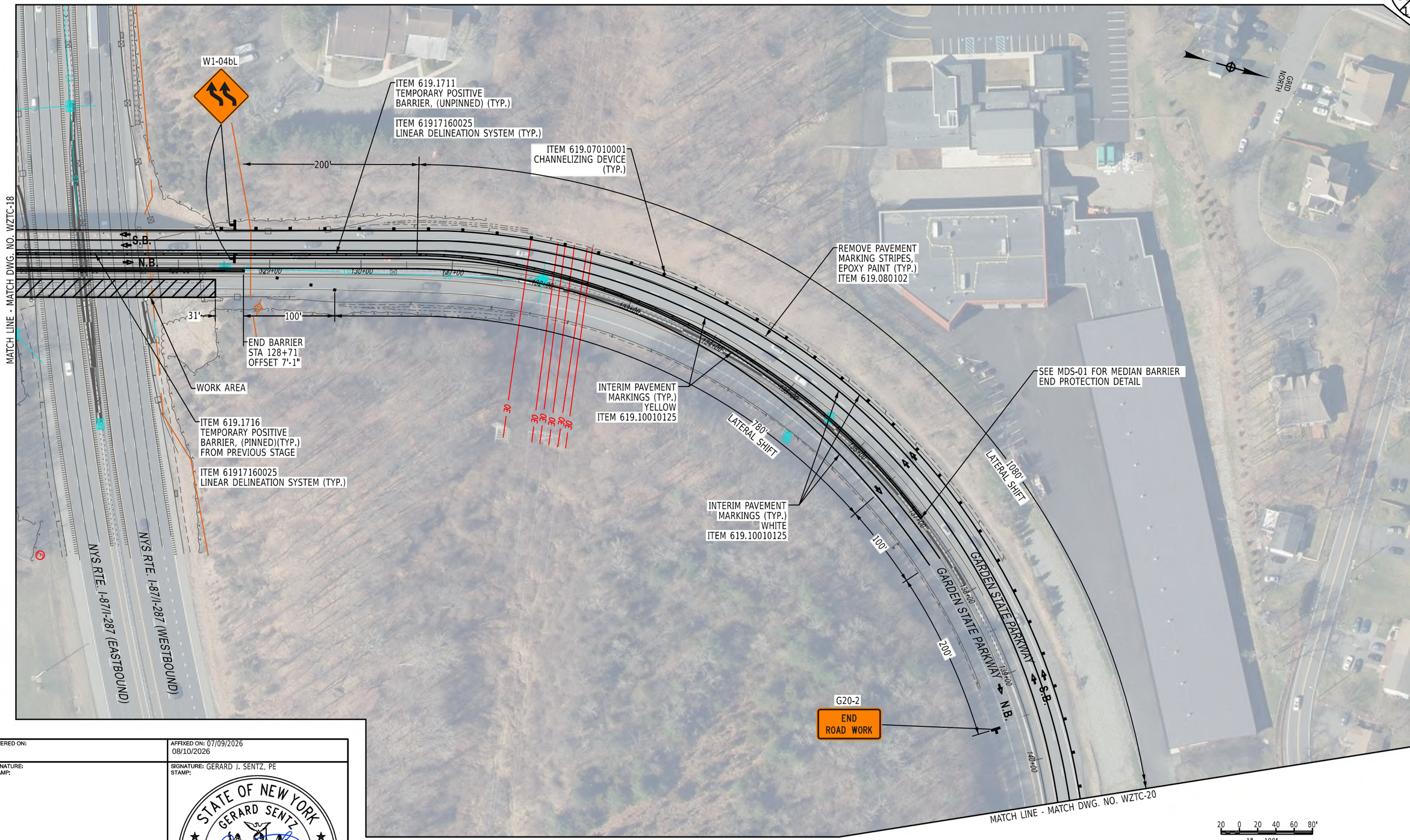

CHECKED BY:
DRAFTED BY:
DESIGNED BY:
DESIGN SUPERVISOR:

PRINTED ON: 4-AUG-2026 12:39 PRINTED BY: bwolfe PIN: XXXXXX

ALTERED ON:	AFFIXED ON: 07/09/2026 08/10/2026
SIGNATURE: STAMP:	SIGNATURE: GERARD J. SENTZ, PE STAMP:

STATE OF NEW YORK
GERARD SENTZ
REGISTRATION
062576
LICENSED PROFESSIONAL ENGINEER

IT IS A VIOLATION OF LAW FOR ANY PERSON, UNLESS THEY ARE ACTING UNDER THE DIRECTION OF A LICENSED PROFESSIONAL ENGINEER, ARCHITECT, LANDSCAPE ARCHITECT, OR LAND SURVEYOR, TO ALTER AN ITEM IN ANY WAY. IF AN ITEM BEARING THE STAMP OF A LICENSED PROFESSIONAL IS ALTERED, THE ALTERING ENGINEER, ARCHITECT, LANDSCAPE ARCHITECT, OR LAND SURVEYOR SHALL STAMP THE DOCUMENT AND INCLUDE THE NOTATION "ALTERED BY" FOLLOWED BY THEIR SIGNATURE, THE DATE OF SUCH ALTERATION, AND A SPECIFIC DESCRIPTION OF THE ALTERATION.

REVISIONS

DATE	DESCRIPTION	BY	SYM.

NEW YORK STATE | Thruway Authority

AZAR DESIGN CO

TITLE OF PROJECT
SUPERSTRUCTURE REPLACEMENT
GSP CONNECTOR OVER NYS THRUWAY

LOCATION OF PROJECT
BIN 5514049 (MP 23.53)

TITLE OF DRAWING
STAGE III
WORK ZONE TRAFFIC CONTROL PLAN

CONTRACT NUMBER: TANY 26-23B

DATE: JULY 2026

DRAWING NUMBER: WZTC-19

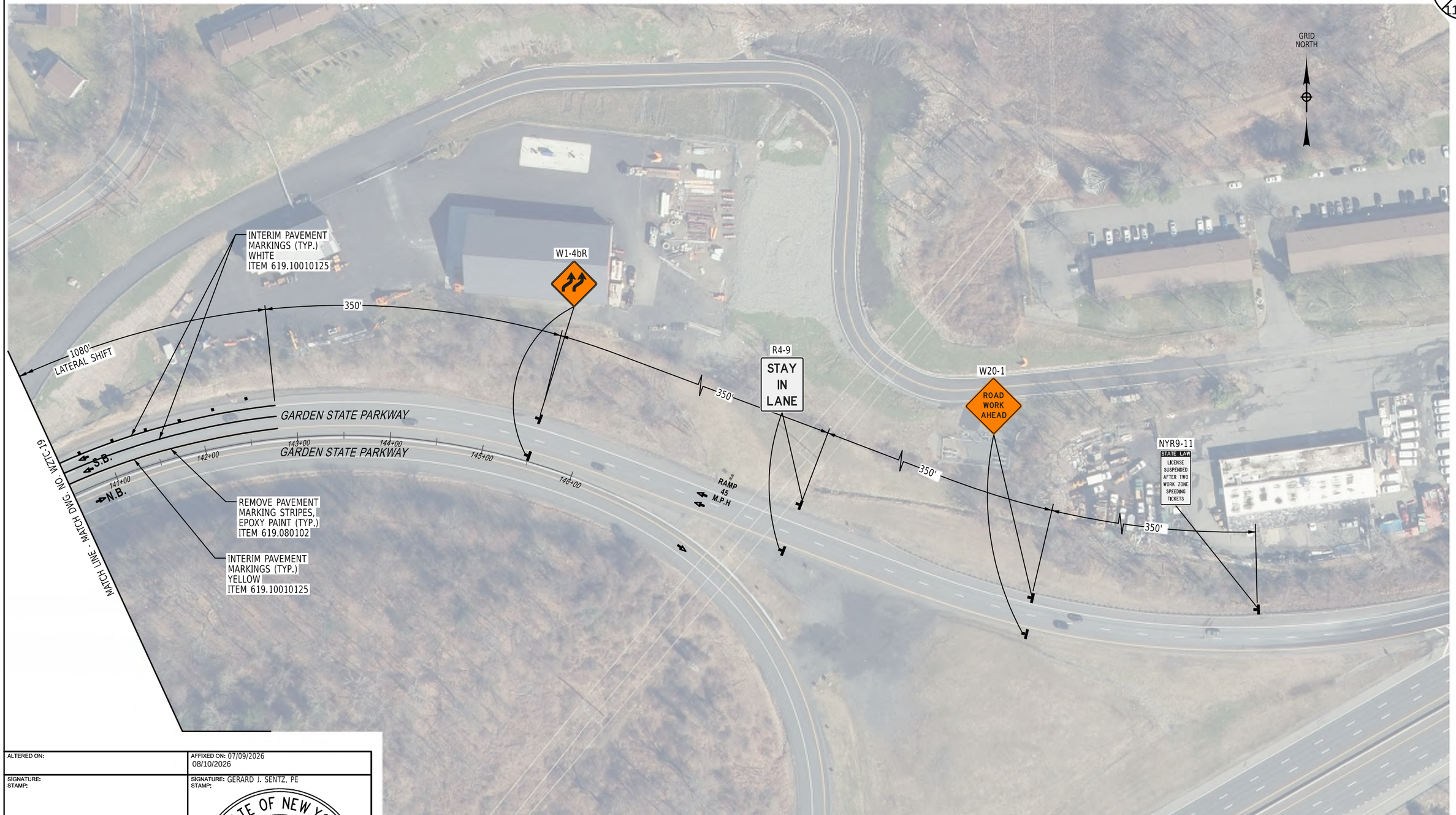

CHECKED BY:
DRAFTED BY:
CHECKED BY:
DESIGNED BY:
DESIGN SUPERVISOR:

PRINTED ON: 4-AUG-2026 12:39 PRINTED BY: bwolfe PIN: XXXXXX

ALTERED ON:	AFFIXED ON: 07/09/2026 08/10/2026
SIGNATURE: STAMP:	SIGNATURE: GERARD J. SENTZ, PE STAMP:

STATE OF NEW YORK
GERARD SENTZ
062576
LICENSED PROFESSIONAL ENGINEER

IT IS A VIOLATION OF LAW FOR ANY PERSON, UNLESS THEY ARE ACTING UNDER THE DIRECTION OF A LICENSED PROFESSIONAL ENGINEER, ARCHITECT, LANDSCAPE ARCHITECT, OR LAND SURVEYOR, TO ALTER AN ITEM IN ANY WAY. IF AN ITEM BEARING THE STAMP OF A LICENSED PROFESSIONAL IS ALTERED, THE ALTERING ENGINEER, ARCHITECT, LANDSCAPE ARCHITECT, OR LAND SURVEYOR SHALL STAMP THE DOCUMENT AND INCLUDE THE NOTATION "ALTERED BY" FOLLOWED BY THEIR SIGNATURE, THE DATE OF SUCH ALTERATION, AND A SPECIFIC DESCRIPTION OF THE ALTERATION.

REVISIONS

DATE	DESCRIPTION	BY	SYM.

NEW YORK STATE | Thruway Authority

AZAR DESIGN CO

TITLE OF PROJECT
SUPERSTRUCTURE REPLACEMENT
GSP CONNECTOR OVER NYS THRUWAY

LOCATION OF PROJECT
BIN 5514049 (MP 23.53)

TITLE OF DRAWING
STAGE III
WORK ZONE TRAFFIC CONTROL PLAN

CONTRACT NUMBER: TANY 26-23B

DATE: JULY 2026

DRAWING NUMBER: WZTC-20

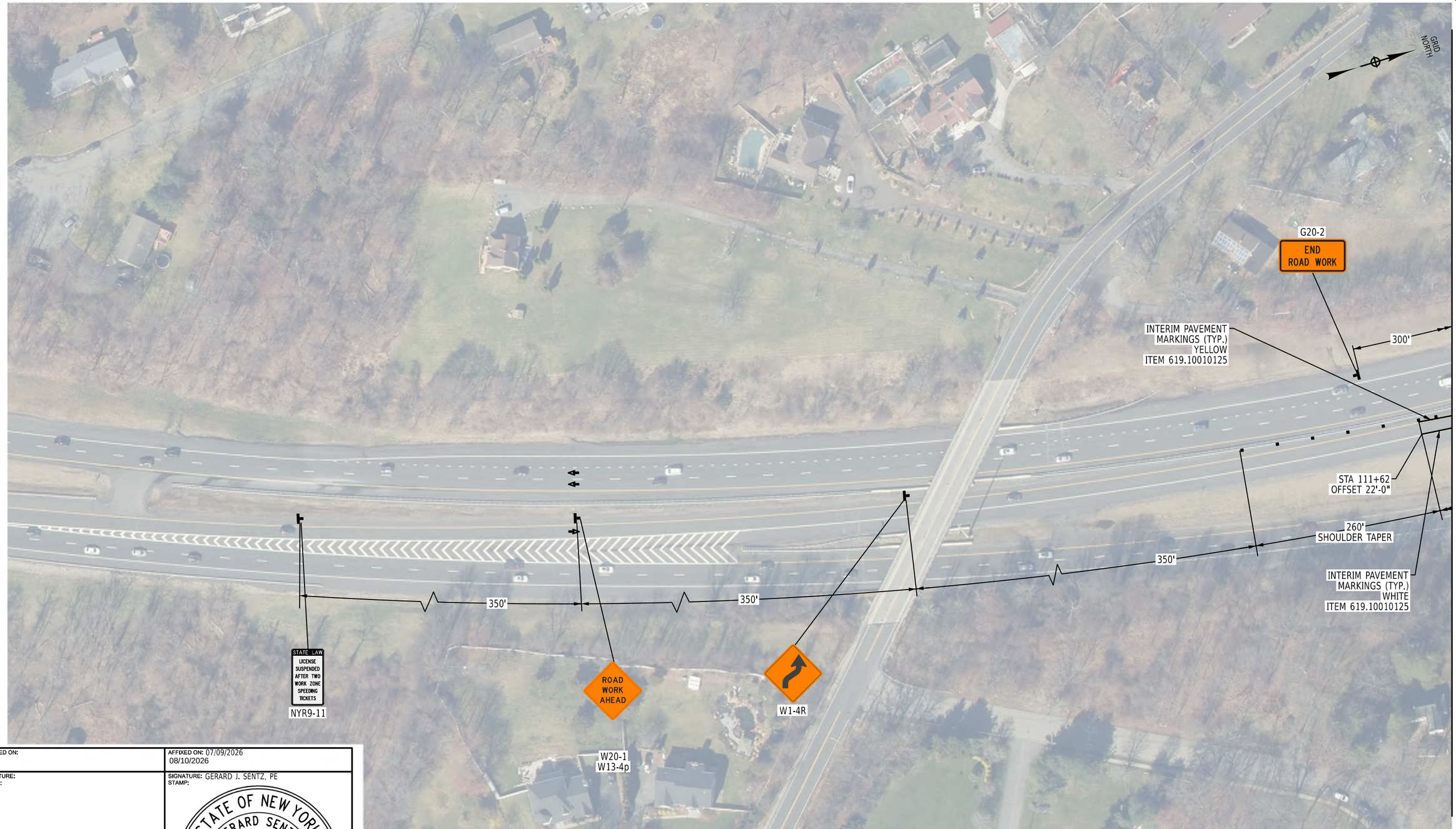

ALTERED ON:	AFFIXED ON: 07/09/2026 08/10/2026
SIGNATURE: STAMP:	SIGNATURE: GERARD J. SENTZ, PE STAMP:

STATE OF NEW YORK
GERARD SENTZ
062576
LICENSED PROFESSIONAL ENGINEER

IT IS A VIOLATION OF LAW FOR ANY PERSON, UNLESS THEY ARE ACTING UNDER THE DIRECTION OF A LICENSED PROFESSIONAL ENGINEER, ARCHITECT, LANDSCAPE ARCHITECT, OR LAND SURVEYOR, TO ALTER AN ITEM IN ANY WAY. IF AN ITEM BEARING THE STAMP OF A LICENSED PROFESSIONAL IS ALTERED, THE ALTERING ENGINEER, ARCHITECT, LANDSCAPE ARCHITECT, OR LAND SURVEYOR SHALL STAMP THE DOCUMENT AND INCLUDE THE NOTATION "ALTERED BY" FOLLOWED BY THEIR SIGNATURE, THE DATE OF SUCH ALTERATION, AND A SPECIFIC DESCRIPTION OF THE ALTERATION.

REVISIONS

DATE	DESCRIPTION	BY	SYM.

NEW YORK STATE | Thruway Authority

AZAR DESIGN CO

TITLE OF PROJECT
SUPERSTRUCTURE REPLACEMENT
GSP CONNECTOR OVER NYS THRUWAY

LOCATION OF PROJECT
BIN 5514049 (MP 23.53)

TITLE OF DRAWING
POST-STAGE WORK ZONE TRAFFIC CONTROL PLAN

CONTRACT NUMBER: TANY 26-23B

DATE: JULY 2026

DRAWING NUMBER: WZTC-21

CHECKED BY:
DRAFTED BY:
CHECKED BY:
DESIGNED BY:
DESIGN SUPERVISOR:
PIN: XXXXXX
PRINTED BY: twolfe
PRINTED ON: 4-AUG-2026 12:40

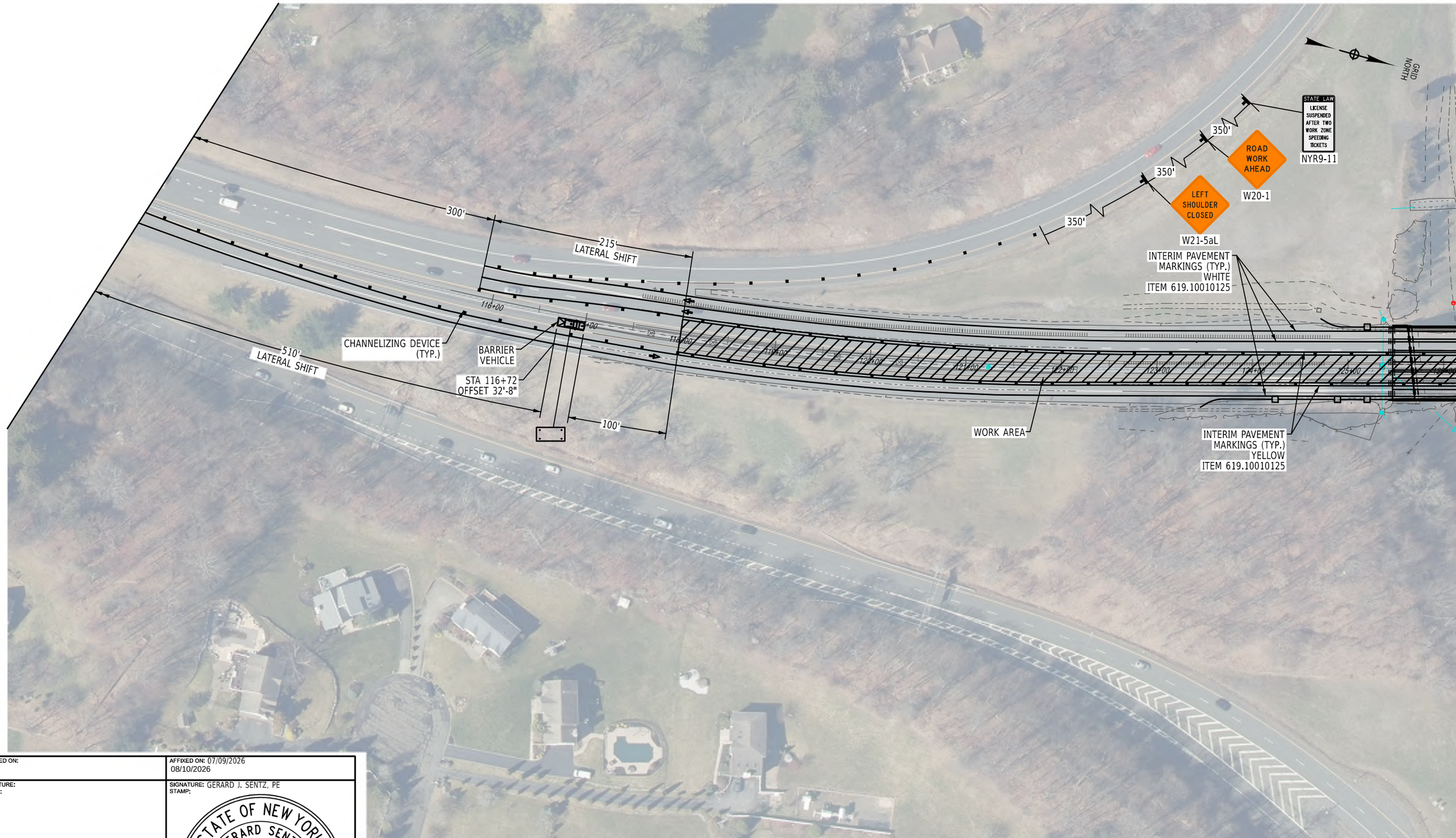

ALTERED ON:	AFFIXED ON: 07/09/2026 08/10/2026
SIGNATURE: STAMP:	SIGNATURE: GERARD J. SENTZ, PE STAMP:

STATE OF NEW YORK
GERARD SENTZ
062576
LICENSED PROFESSIONAL ENGINEER

IT IS A VIOLATION OF LAW FOR ANY PERSON, UNLESS THEY ARE ACTING UNDER THE DIRECTION OF A LICENSED PROFESSIONAL ENGINEER, ARCHITECT, LANDSCAPE ARCHITECT, OR LAND SURVEYOR, TO ALTER AN ITEM IN ANY WAY. IF AN ITEM BEARING THE STAMP OF A LICENSED PROFESSIONAL IS ALTERED, THE ALTERING ENGINEER, ARCHITECT, LANDSCAPE ARCHITECT, OR LAND SURVEYOR SHALL STAMP THE DOCUMENT AND INCLUDE THE NOTATION "ALTERED BY" FOLLOWED BY THEIR SIGNATURE, THE DATE OF SUCH ALTERATION, AND A SPECIFIC DESCRIPTION OF THE ALTERATION.

REVISIONS

DATE	DESCRIPTION	BY	SYM.

NEW YORK STATE | Thruway Authority

AZAR DESIGN CO

TITLE OF PROJECT
SUPERSTRUCTURE REPLACEMENT
GSP CONNECTOR OVER NYS THRUWAY

LOCATION OF PROJECT
BIN 5514049 (MP 23.53)

TITLE OF DRAWING
POST-STAGE
WORK ZONE TRAFFIC CONTROL PLAN

CONTRACT NUMBER: TANY 26-23B

DATE: JULY 2026

DRAWING NUMBER: WZTC-22

CHECKED BY:
DRAFTED BY:
CHECKED BY:
DESIGNED BY:
DESIGN SUPERVISOR:

PIN: XXXXXX
PRINTED BY: bwolfe
PRINTED ON: 4-AUG-2026 12:41

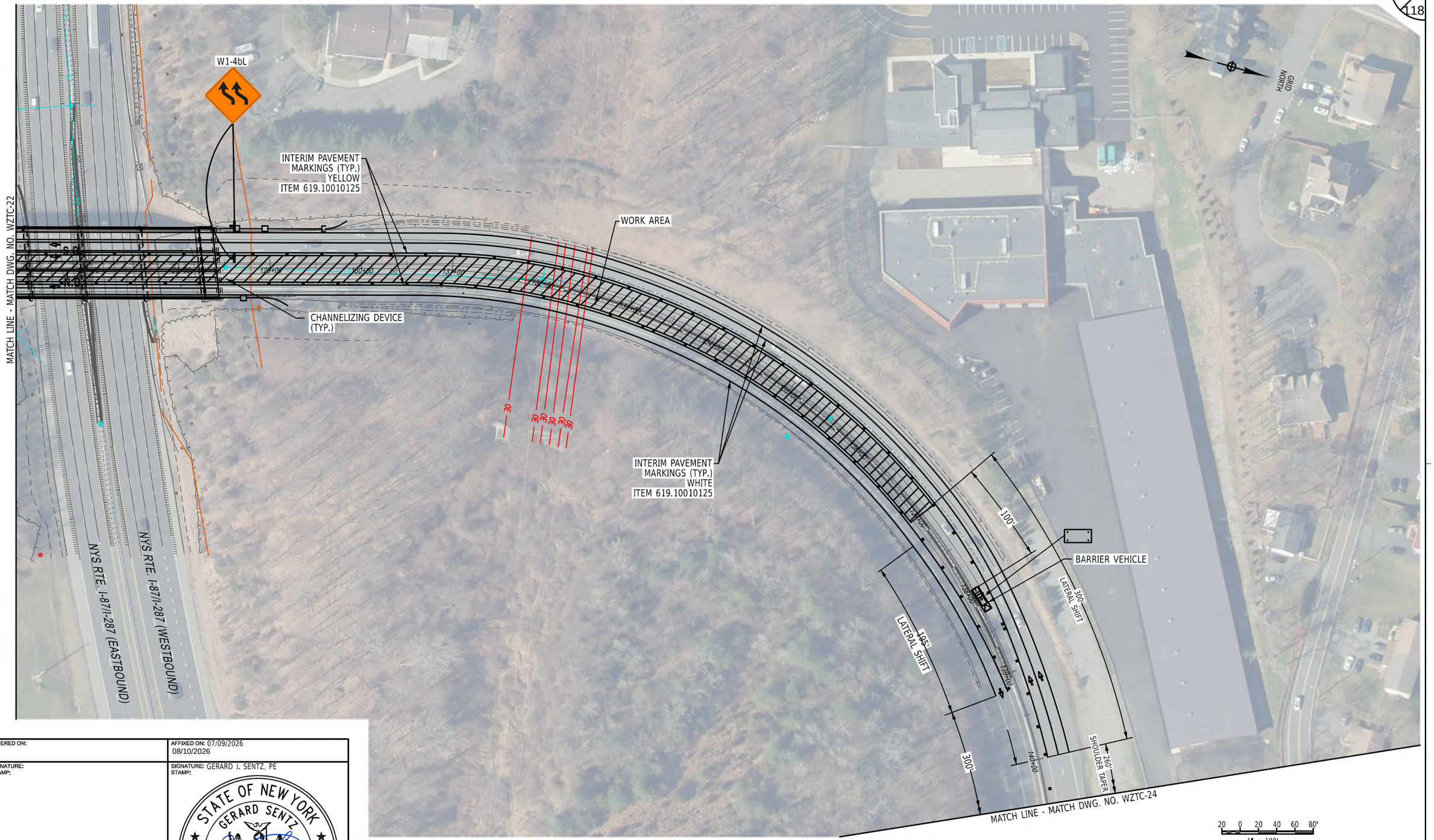

CHECKED BY:
DRAFTED BY:
CHECKED BY:
DESIGNED BY:
DESIGN SUPERVISOR:

PRINTED ON: 4-AUG-2026 12:42 PRINTED BY: bwolfe PIN: XXXXXX

ALTERED ON:	AFFIXED ON: 07/09/2026 08/10/2026
SIGNATURE: STAMP:	SIGNATURE: GERARD J. SENTZ, PE STAMP: STATE OF NEW YORK · GERARD SENTZ · 062576 · LICENSED PROFESSIONAL ENGINEER

IT IS A VIOLATION OF LAW FOR ANY PERSON, UNLESS THEY ARE ACTING UNDER THE DIRECTION OF A LICENSED PROFESSIONAL ENGINEER, ARCHITECT, LANDSCAPE ARCHITECT, OR LAND SURVEYOR, TO ALTER AN ITEM IN ANY WAY. IF AN ITEM BEARING THE STAMP OF A LICENSED PROFESSIONAL IS ALTERED, THE ALTERING ENGINEER, ARCHITECT, LANDSCAPE ARCHITECT, OR LAND SURVEYOR SHALL STAMP THE DOCUMENT AND INCLUDE THE NOTATION "ALTERED BY" FOLLOWED BY THEIR SIGNATURE, THE DATE OF SUCH ALTERATION, AND A SPECIFIC DESCRIPTION OF THE ALTERATION.

REVISIONS

DATE	DESCRIPTION	BY	SYM.

NEW YORK STATE | Thruway Authority

AZAR DESIGN CO

TITLE OF PROJECT
SUPERSTRUCTURE REPLACEMENT
GSP CONNECTOR OVER NYS THRUWAY

LOCATION OF PROJECT
BIN 5514049 (MP 23.53)

TITLE OF DRAWING
POST-STAGE WORK ZONE TRAFFIC CONTROL PLAN

CONTRACT NUMBER: TANY 26-23B

DATE: JULY 2026

DRAWING NUMBER: WZTC-23

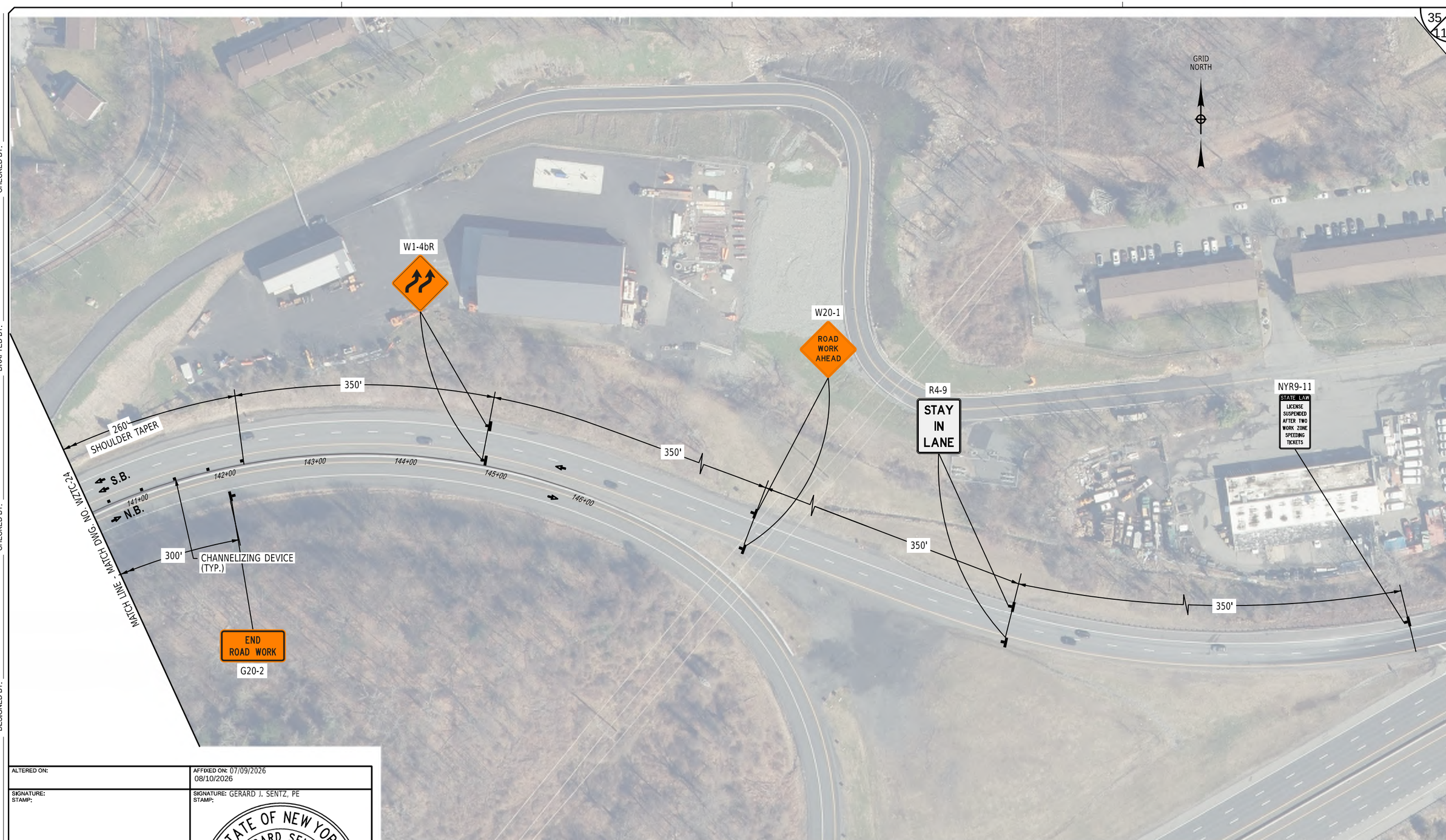

ALTERED ON:	AFFIXED ON: 07/09/2026 08/10/2026
SIGNATURE: STAMP:	SIGNATURE: GERARD J. SENTZ, PE STAMP:

STATE OF NEW YORK
GERARD SENTZ
062576
REGISTRATION
LICENSED PROFESSIONAL ENGINEER

IT IS A VIOLATION OF LAW FOR ANY PERSON, UNLESS THEY ARE ACTING UNDER THE DIRECTION OF A LICENSED PROFESSIONAL ENGINEER, ARCHITECT, LANDSCAPE ARCHITECT, OR LAND SURVEYOR, TO ALTER AN ITEM IN ANY WAY. IF AN ITEM BEARING THE STAMP OF A LICENSED PROFESSIONAL IS ALTERED, THE ALTERING ENGINEER, ARCHITECT, LANDSCAPE ARCHITECT, OR LAND SURVEYOR SHALL STAMP THE DOCUMENT AND INCLUDE THE NOTATION "ALTERED BY" FOLLOWED BY THEIR SIGNATURE, THE DATE OF SUCH ALTERATION, AND A SPECIFIC DESCRIPTION OF THE ALTERATION.

REVISIONS

DATE	DESCRIPTION	BY	SYM.

NEW YORK STATE | Thruway Authority

AZAR DESIGN CO

TITLE OF PROJECT
SUPERSTRUCTURE REPLACEMENT
GSP CONNECTOR OVER NYS THRUWAY

LOCATION OF PROJECT
BIN 5514049 (MP 23.53)

TITLE OF DRAWING
POST-STAGE WORK ZONE TRAFFIC CONTROL PLAN

CONTRACT NUMBER: TANY 26-23B

DATE: JULY 2026

DRAWING NUMBER: WZTC-24

CHECKED BY:
DRAFTED BY:
CHECKED BY:
DESIGNED BY:
DESIGN SUPERVISOR:

PIN: XXXXXX
PRINTED BY: twolfe
PRINTED ON: 4-AUG-2026 12:43

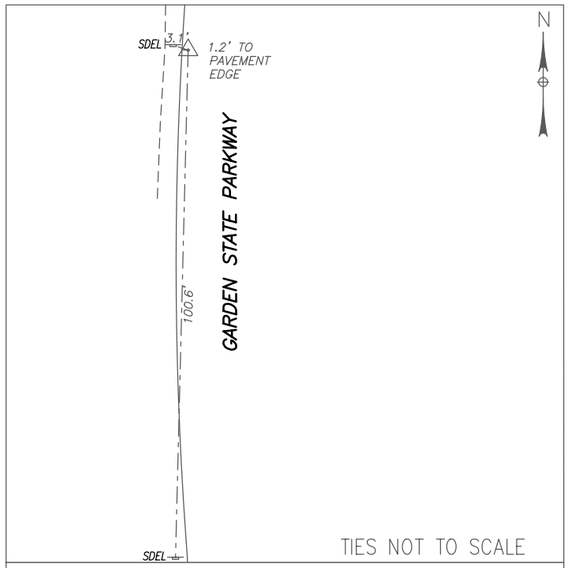

CBP 10 STA. (17+62.15)

CBP 10 IS A MAG NAIL SET ON THE WEST SIDE OF THE GARDEN STATE PARKWAY AND LOCATED APPROXIMATELY 477' NORTH OF THE NORTHERLY BRIDGE JOINT OF GARDEN STATE PARKWAY ROAD

NYSPCS EAST ZONE NAD 83
(2011) NAVD 88
N=825,669.38
E=618,653.00
ELEV=460.23'

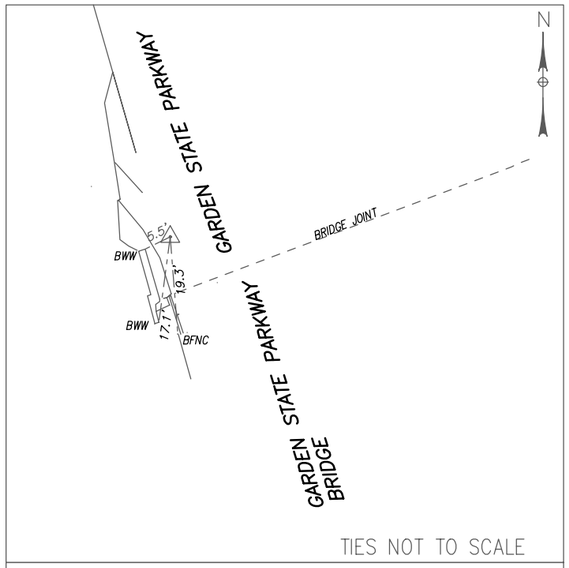

CBP 20 STA. (12+90.15)

CBP 20 IS A MAG NAIL SET ON THE WEST SIDE OF THE GARDEN STATE PARKWAY AND LOCATED APPROXIMATELY 10' NORTH OF THE NORTHERLY BRIDGE JOINT OF GARDEN STATE PARKWAY ROAD

NYSPCS EAST ZONE NAD 83
(2011) NAVD 88
N=825,206.69
E=618,746.31
ELEV=464.32'

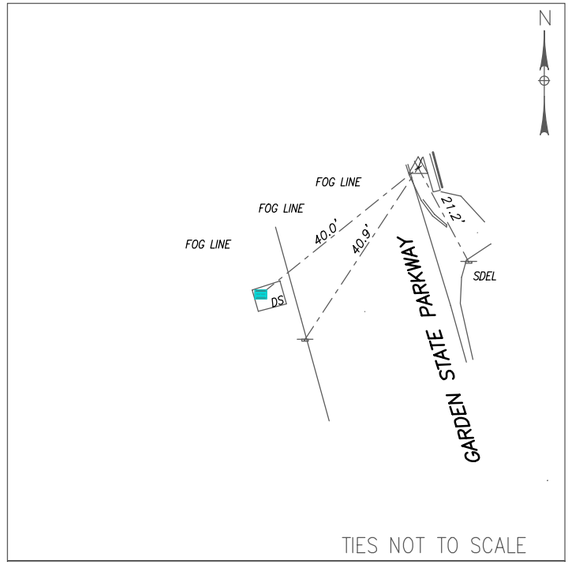

CBP 30 STA. (10+00.00)

CBP 30 IS A MAG NAIL SET ON THE EAST SIDE OF THE GARDEN STATE PARKWAY AND LOCATED APPROXIMATELY 18' SOUTH OF THE SOUTHERLY BRIDGE JOINT OF GARDEN STATE PARKWAY ROAD

NYSPCS EAST ZONE NAD 83
(2011) NAVD 88
N=824,954.89
E=618,890.46
ELEV=465.76'

ALTERED ON:	AFFIXED ON: 08/10/2026
SIGNATURE: STAMP:	SIGNATURE: STAMP: STATE OF NEW YORK · EDWIN TWISS · EXCELSIOR · 080650 · LICENSED PROFESSIONAL ENGINEER

IT IS A VIOLATION OF LAW FOR ANY PERSON, UNLESS THEY ARE ACTING UNDER THE DIRECTION OF A LICENSED PROFESSIONAL ENGINEER, ARCHITECT, LANDSCAPE ARCHITECT, OR LAND SURVEYOR, TO ALTER AN ITEM IN ANY WAY. IF AN ITEM BEARING THE STAMP OF A LICENSED PROFESSIONAL IS ALTERED, THE ALTERING ENGINEER, ARCHITECT, LANDSCAPE ARCHITECT, OR LAND SURVEYOR SHALL STAMP THE DOCUMENT AND INCLUDE THE NOTATION "ALTERED BY" FOLLOWED BY THEIR SIGNATURE, THE DATE OF SUCH ALTERATION, AND A SPECIFIC DESCRIPTION OF THE ALTERATION.

REVISIONS

DATE	DESCRIPTION	BY	SYM.

NEW YORK STATE | Thruway Authority

AECOM

TITLE OF PROJECT
SUPERSTRUCTURE REPLACEMENT
GSP CONNECTOR OVER NYS THRUWAY

LOCATION OF PROJECT
BIN 5514049 (MP 23.53)

TITLE OF DRAWING
BASELINE TIES

CONTRACT NUMBER: TANY 26-23B

DATE: JULY 2026

DRAWING NUMBER: BLT-01

DESIGN SUPERVISOR: RWL | DESIGNED BY: IW / MR / VZ | DRAFTED BY: AICE | CHECKED BY: IW / MR / VZ | CHECKED BY: AICE

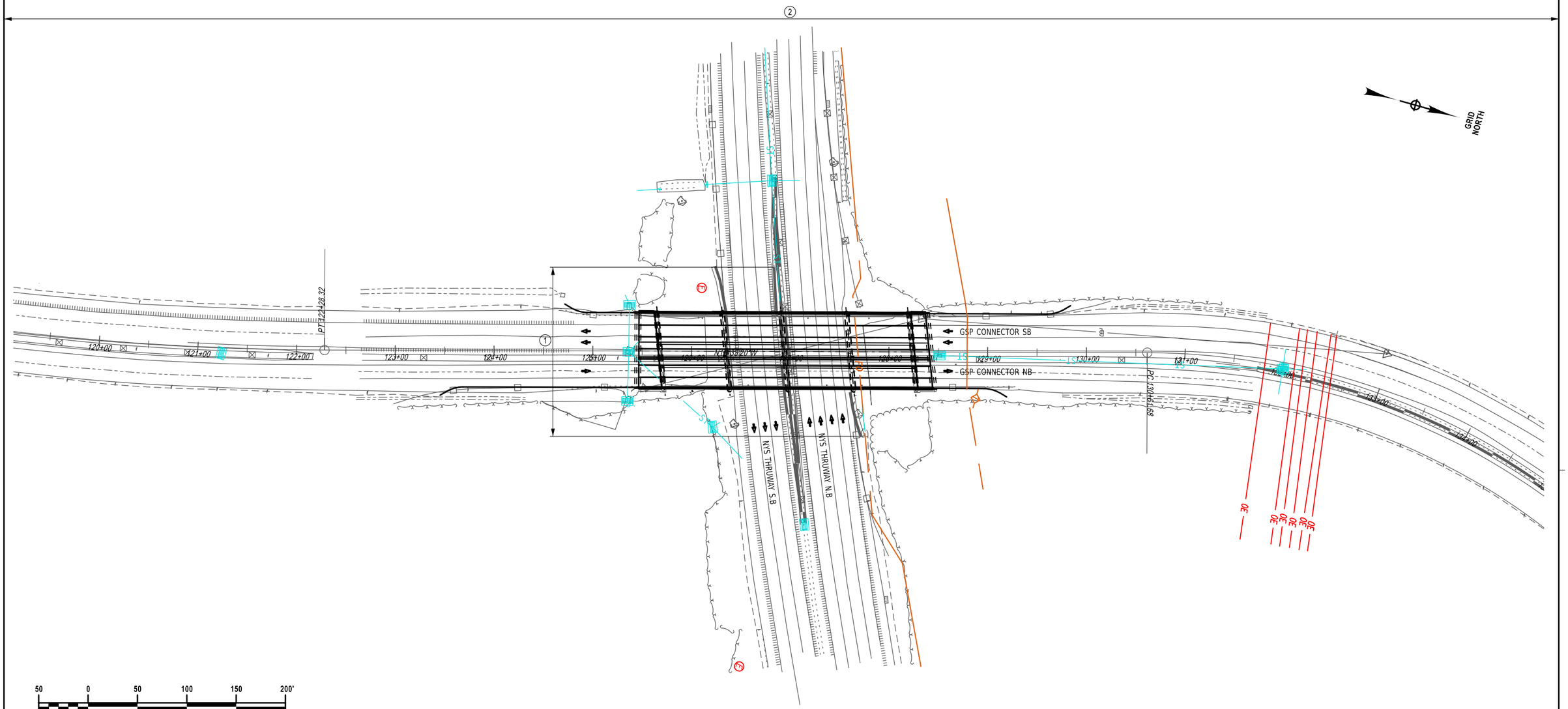

50 0 50 100 150 200'

1" = 100'

MAINTENANCE JURISDICTION TABLE							
PART NUMBER	HIGHWAY	LIMITS	FEATURES TO BE MAINTAINED	CENTERLINE MILES (MI.)	LANE MILES (MI.)	AGENCY	AUTHORITY
1	INTERSTATE I-87/I-287	MP 23.50 TO MP 23.55	ALL ELEMENTS	0.05	0.35	NYSTA	SECTION 340-B HIGHWAY LAW
2	GARDEN STATE PARKWAY CONNECTOR	STA. 118+00 TO STA. 137+00	ALL ELEMENTS	0.36	1.08	NYSTA	SECTION 340-B HIGHWAY LAW

ALTERED ON:

AFFIXED ON: 08/10/2026

SIGNATURE:
STAMP:

SIGNATURE:
STAMP:

STATE OF NEW YORK
EDWIN TWISS
080650
LICENSED PROFESSIONAL ENGINEER

IT IS A VIOLATION OF LAW FOR ANY PERSON, UNLESS THEY ARE ACTING UNDER THE DIRECTION OF A LICENSED PROFESSIONAL ENGINEER, ARCHITECT, LANDSCAPE ARCHITECT, OR LAND SURVEYOR, TO ALTER AN ITEM IN ANY WAY. IF AN ITEM BEARING THE STAMP OF A LICENSED PROFESSIONAL IS ALTERED, THE ALTERING ENGINEER, ARCHITECT, LANDSCAPE ARCHITECT, OR LAND SURVEYOR SHALL STAMP THE DOCUMENT AND INCLUDE THE NOTATION "ALTERED BY" FOLLOWED BY THEIR SIGNATURE, THE DATE OF SUCH ALTERATION, AND A SPECIFIC DESCRIPTION OF THE ALTERATION.

REVISIONS

DATE	DESCRIPTION	BY	SYM.

NEW YORK STATE | Thruway Authority

AECOM

TITLE OF PROJECT
SUPERSTRUCTURE REPLACEMENT
GSP CONNECTOR OVER NYS THRUWAY

LOCATION OF PROJECT
BIN 5514049 (MP 23.53)

TITLE OF DRAWING
MAINTENANCE JURISDICTION

CONTRACT NUMBER: TANY 26-23B

DATE: JULY 2026

DRAWING NUMBER: MJ-01

DESIGN SUPERVISOR: RWL | DESIGNED BY: IW / MR / VZ | DRAFTED BY: AICE | CHECKED BY: IW / MR / VZ | AICE | CHECKED BY: AICE

GUIDE RAIL TABLE (REMOVAL AND INSTALLATION)							
STA.	STA.	O/S	POST SPACING (LF)	568.70 (LF)	606.73 (LF)	606.120201 (EACH)	606.10 (LF)
124+65.57	125+62.49	LT	3.00		96.92		
122+99.37	125+69.97	RT	3.00		270.60		
128+22.52	130+24.15	LT	3.00		201.63		
128+28.91	129+26.19	RT	3.00		97.28		
125+12.66	125+52.66	LT	3.00	40.00			
125+12.66	125+52.66	RT	3.00	40.00			
128+30.73	128+70.73	LT	3.00	40.00			
128+38.30	128+78.30	RT	3.00	40.00			
124+71.57	124+94.66	LT	3.00			1	
123+45.57	123+68.66	RT	3.00			1	
129+60.73	129+83.82	LT	3.00			1	
128+96.30	129+19.39	RT	3.00			1	
124+94.66	125+12.66	LT	3.00				18.00
123+68.66	125+12.66	RT	3.00				144.00
128+70.73	129+60.73	LT	3.00				90.00
128+78.30	128+96.30	RT	3.00				18.00
			Σ	320.00	666.43	4	270.00

DELINEATORS (EACH)							
STA.	STA.	O/S	LENGTH (LF)	POST SPACING (LF)	646.06030025 (EACH)	646.06120025 (EACH)	647.83001002 (EACH)
125+16.66	137+00.00	MEDIAN	1200.00	20.00		60.00	
118+00.00	137+00.00	NB RT	1900.00	132.00	15		15
118+00.00	137+00.00	SB RT	1900.00	132.00	15		15
				Σ	30	60.00	30

CONCRETE BARRIER TABLE (REMOVAL AND INSTALLATION)											
STA.	STA.	O/S	606.8906 (EACH)	606.90000011 (LF)	606.3043 (LF)	606.3041 (LF)	606.57 (LF)	606.5810 (LF)	606.65 (LF)	606.67 (LF)	606.7201 (LF)
125+16.66	125+46.66	BEGIN MEDIAN	1								
128+40.77	128+70.77	END MEDIAN		30.00							
125+46.66	128+40.77	BRIDGE MEDIAN			294.11						
128+70.77	131+74.79	END MEDIAN				304.02					304.02
131+74.79	137+00.00	END MEDIAN					525.21		525.21		
125+46.66	128+40.77	LT									
125+46.66	128+40.77	RT									
118+00.00	125+16.66	BEGIN MEDIAN						716.66		716.66	
		Σ	1	30.00	294.11	304.02	525.21	716.66	525.21	716.66	304.02

CHECKED BY:
DRAFTED BY:
CHECKED BY:
DESIGNED BY:
DESIGN SUPERVISOR:

PRINTED ON: 4-AUG-2026 12:45 PRINTED BY: bwolfe PIN: XXXXXX

ALTERED ON:

AFFIXED ON: 07/09/2026
08/10/2026

SIGNATURE:
STAMP:

SIGNATURE: GERARD J. SENTZ, PE
STAMP:

STATE OF NEW YORK
GERARD SENTZ
062576
LICENSED PROFESSIONAL ENGINEER

IT IS A VIOLATION OF LAW FOR ANY PERSON, UNLESS THEY ARE ACTING UNDER THE DIRECTION OF A LICENSED PROFESSIONAL ENGINEER, ARCHITECT, LANDSCAPE ARCHITECT, OR LAND SURVEYOR, TO ALTER AN ITEM IN ANY WAY. IF AN ITEM BEARING THE STAMP OF A LICENSED PROFESSIONAL IS ALTERED, THE ALTERING ENGINEER, ARCHITECT, LANDSCAPE ARCHITECT, OR LAND SURVEYOR SHALL STAMP THE DOCUMENT AND INCLUDE THE NOTATION "ALTERED BY" FOLLOWED BY THEIR SIGNATURE, THE DATE OF SUCH ALTERATION, AND A SPECIFIC DESCRIPTION OF THE ALTERATION.

REVISIONS

DATE	DESCRIPTION	BY	SYM.

NEW YORK STATE | Thruway Authority

AZAR DESIGN CO

TITLE OF PROJECT
SUPERSTRUCTURE REPLACEMENT
GSP CONNECTOR OVER NYS THRUWAY

LOCATION OF PROJECT
BIN 5514049 (MP 23.53)

TITLE OF DRAWING
MISCELLANEOUS TABLES

CONTRACT NUMBER: TANY 26-23B

DATE: JULY 2026

DRAWING NUMBER: MIS-01

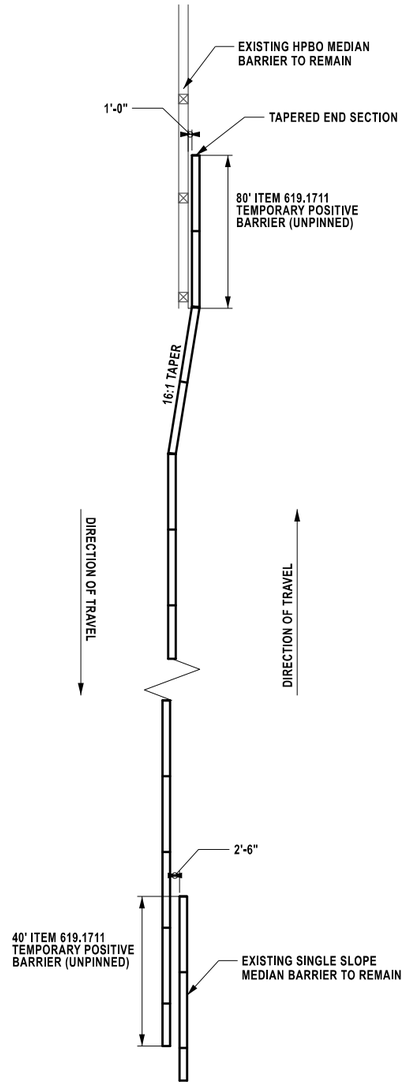

MEDIAN BARRIER END PROTECTION DETAIL

NOT IN SCALE

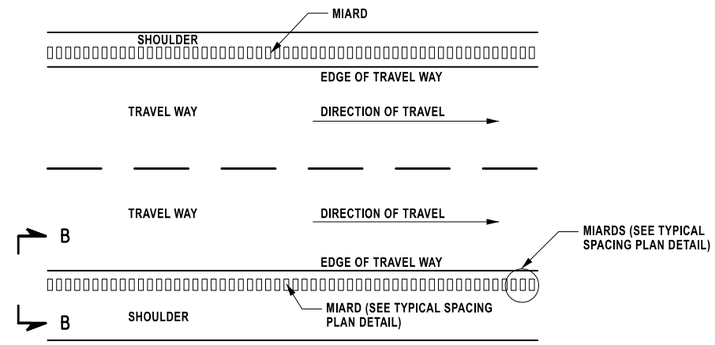

GENERAL PLAN VIEW (MIARDS)

NOT IN SCALE

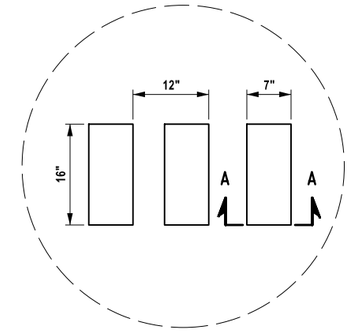

TYPICAL SPACING PLAN (MIARDS)

NOT IN SCALE

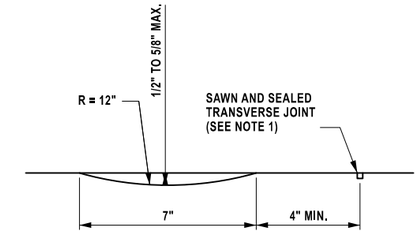

SECTION A-A (MIARDS)

NOT IN SCALE

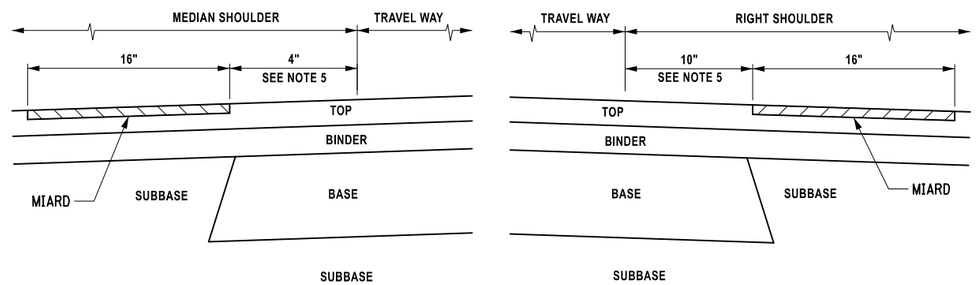

SECTION B-B - ASPHALT PAVEMENT (MIARDS)

NOT IN SCALE

MIARD NOTES:

1. NO MILLING SHALL BE DONE WITHIN 4" OF SAWN AND SEALED TRANSVERSE JOINTS. SEE SECTION A-A.
2. WHERE RIGHT SHOULDER JOINT IS AT EDGE OF TRAVELED WAY, PREFERRED MIARD LOCATION IS 0.25 m OUTSIDE OF JOINT.
3. NEW ASPHALT PAVEMENT SHOULD BE ALLOWED TO HARDEN FOR AT LEAST 24 HOURS BEFORE AUDIBLE ROADWAY DELINEATORS ARE MILLED IN.
4. MIARDS ARE TO BE PLACED IN MIDDLE OF 8" TO 11" WIDE LEFT SHOULDERS TO ALLOW DECELERATING VEHICLE TO STRADDLE THE MIARDS.
5. MAY BE INCREASED AT DISCRETION OF THE EIC.

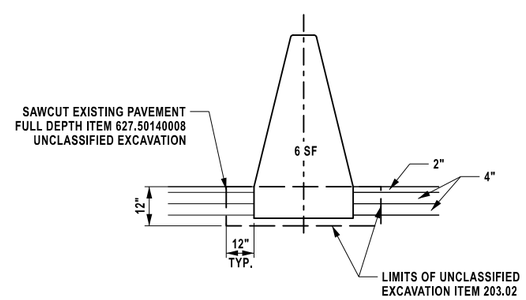

MEDIAN BARRIER REMOVAL DETAIL

NOT IN SCALE

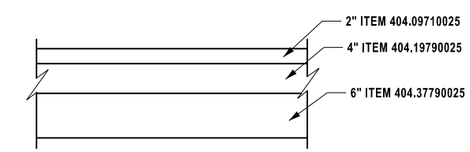

MEDIAN PAVEMENT DETAIL

NOT IN SCALE

ALTERED ON:	AFFIXED ON: 07/09/2026 08/10/2026
SIGNATURE: STAMP:	SIGNATURE: GERARD J. SENTZ, PE STAMP: STATE OF NEW YORK · GERARD SENTZ · REGISTERED · 062576 · LICENSED PROFESSIONAL ENGINEER

IT IS A VIOLATION OF LAW FOR ANY PERSON, UNLESS THEY ARE ACTING UNDER THE DIRECTION OF A LICENSED PROFESSIONAL ENGINEER, ARCHITECT, LANDSCAPE ARCHITECT, OR LAND SURVEYOR, TO ALTER AN ITEM IN ANY WAY. IF AN ITEM BEARING THE STAMP OF A LICENSED PROFESSIONAL IS ALTERED, THE ALTERING ENGINEER, ARCHITECT, LANDSCAPE ARCHITECT, OR LAND SURVEYOR SHALL STAMP THE DOCUMENT AND INCLUDE THE NOTATION "ALTERED BY" FOLLOWED BY THEIR SIGNATURE, THE DATE OF SUCH ALTERATION, AND A SPECIFIC DESCRIPTION OF THE ALTERATION.

REVISIONS

DATE	DESCRIPTION	BY	SYM.

NEW YORK STATE | Thruway Authority

AZAR DESIGN CO

TITLE OF PROJECT: SUPERSTRUCTURE REPLACEMENT GSP CONNECTOR OVER NYS THRUWAY

LOCATION OF PROJECT: BIN 5514049 (MP 23.53)

TITLE OF DRAWING: MISCELLANEOUS DETIALS

CONTRACT NUMBER: TANY 26-23B

DATE: JULY 2026

DRAWING NUMBER: MDS-01

CHECKED BY:
DRAFTED BY:
CHECKED BY:
DESIGNED BY:
DESIGN SUPERVISOR:

PRINTED ON: 4-AUG-2026 12:45 PRINTED BY: bwalls PIN: XXXXXX

SUMMARY OF EARTHWORK (ITEMS 203.02 AND 203.03 ONLY)					
SOURCE	EXCAVATION			ITEM 203.02	ITEM 203.03
	T_E	C_R	T_U	C_T	F_T
GARDEN STATE PKWY CONNECTOR	----	----	----	419	217
TOTALS	----	----	----	419	217

SUMMARY OF TRENCH AND CULVERT EXCAVATION (ITEM 206.0201 ONLY)			
SOURCE	EXCAVATION		ITEM 206.0201
	ROCK	NON-ROCK	
TOTALS			

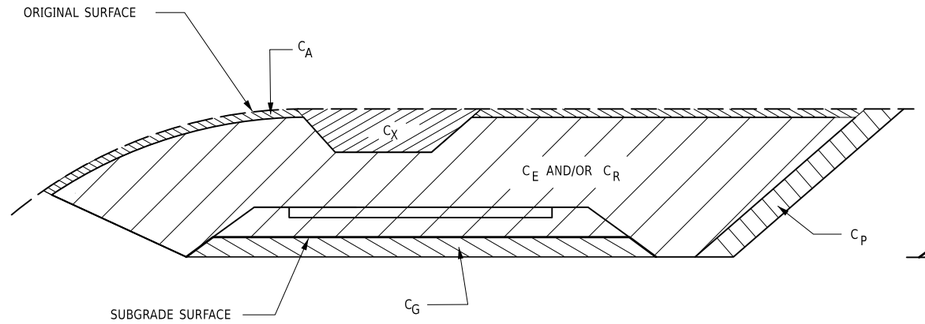

CUT SECTION

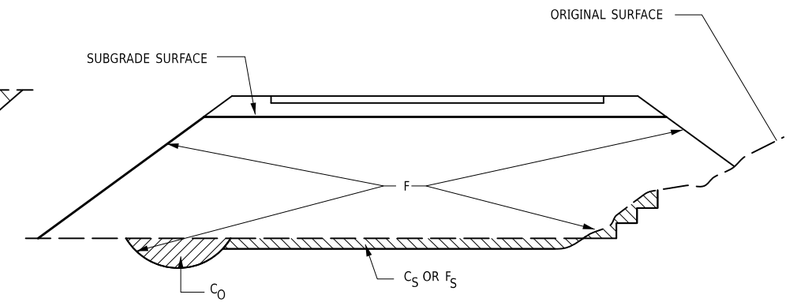

FILL SECTION

DEFINITIONS:

C_B - EXCAVATION FOR REQUIRED BENCHING, (BOTH LONGITUDINAL AND TRANSVERSE).

C_G - EXCAVATION FOR SUBGRADE IMPROVEMENT.

C_P - EXCAVATION FROM CUT SLOPE NECESSARY TO PLACE SLOPE PROTECTION.

C_E - PORTION OF CUT ASSUMED TO BE EARTH SUITABLE FOR EMBANKMENT CONSTRUCTION, EXCLUDING C AND C_G

T_E - $(C_B + C_G + C_P + C_E)$ TOTAL EARTH EXCAVATION ASSUMED SUITABLE FOR EMBANKMENT CONSTRUCTION.

C_A - EXCAVATION OF TOPSOIL (UNSUITABLE MATERIAL) IN CUT.

C_S - EXCAVATION OF TOPSOIL (UNSUITABLE MATERIAL) UNDER EMBANKMENT.

C_X - EXCAVATION OF UNSUITABLE MATERIAL IN CUT: SWAMP OR DUMP

C_O - EXCAVATION OF UNSUITABLE MATERIAL BENEATH EMBANKMENT: SWAMP OR DUMP

T_U - $(C_A + C_S + C_X + C_O)$ TOTAL EXCAVATION ASSUMED UNSUITABLE FOR EMBANKMENT CONSTRUCTION.

C_R - PORTION OF CUT ASSUMED TO BE ROCK, INCLUDING C_G IF APPLICABLE.

C_T - $(T_E + T_U + C_R)$ TOTAL EXCAVATION.

DEFINITIONS:

F_B - FILL REQUIRED TO REPLACE BENCHES.

F_S - FILL REQUIRED TO REPLACE TOPSOIL REMOVED BENEATH EMBANKMENTS.

F - FILL REQUIRED TO COMPLETE EMBANKMENT TO SUBGRADE SURFACE AND SIDE-SLOPES AFTER FOUNDATION IS PREPARED.

F_T - $(F_B + F_S + F)$ TOTAL FILL REQUIRED.

T_A - $(T_E \times F_E + C_R \times F_R)$ THE VOLUME WHICH THE SUITABLE EXCAVATED MATERIAL COULD OCCUPY IN EMBANKMENT.

F_E - SHRINKAGE FACTOR FOR EARTH

F_R - SWELL FACTOR FOR ROCK

NOTES:

THE CONTRACTOR'S ATTENTION IS DIRECTED TO THE FACT THAT THESE TABLES ARE ESTIMATED, AND ARE PROVIDED FOR THE PURPOSE OF PREPARING AN ESTIMATE. THEY ARE NOT TO BE CONSTRUED AS BEING EXACT. THEY ARE INTENDED TO QUANTIFY AND QUALIFY THE NATURE OF THE WORK TO BE PERFORMED. SIGNIFICANT DIFFERENCE FROM THIS REPRESENTATION, WHEN ENCOUNTERED DURING THE ACTUAL WORK, WILL BE HANDLED ACCORDING TO THE SPECIFICATIONS GOVERNING THIS PROJECT.

203.02 UNCLASSIFIED EXCAVATION AND DISPOSAL

203.03 EMBANKMENT IN PLACE

206.0201 TRENCH AND CULVERT EXCAVATION

SUBDIVISION NO.	LOCATION (BIN)	SUITABLE EXCAVATION					ROCK	UNSUITABLE EXCAVATION					TOTAL EXCAVATION	EMBANKMENT			
		C_B	C_G	C_P	C_E	T_E	C_R	C_A	C_S	C_X	C_O	T_U	C_T	F_B	F_S	F	F_T
GARDEN STATE PKWY CONN.	BIN 5514049 STA. 124+XX TO STA. 129+XX									419			419			217	217
	TOTALS									419			419			217	217

IT IS A VIOLATION OF LAW FOR ANY PERSON, UNLESS THEY ARE ACTING UNDER THE DIRECTION OF A LICENSED PROFESSIONAL ENGINEER, ARCHITECT, LANDSCAPE ARCHITECT, OR LAND SURVEYOR, TO ALTER AN ITEM IN ANY WAY. IF AN ITEM BEARING THE STAMP OF A LICENSED PROFESSIONAL IS ALTERED, THE ALTERING ENGINEER, ARCHITECT, LANDSCAPE ARCHITECT, OR LAND SURVEYOR SHALL STAMP THE DOCUMENT AND INCLUDE THE NOTATION "ALTERED BY" FOLLOWED BY THEIR SIGNATURE, THE DATE OF SUCH ALTERATION, AND A SPECIFIC DESCRIPTION OF THE ALTERATION.

REVISIONS

DATE	DESCRIPTION	BY	SYM.

NEW YORK STATE | Thruway Authority

AECOM

TITLE OF PROJECT: SUPERSTRUCTURE REPLACEMENT GSP CONNECTOR OVER NYS THRUWAY

LOCATION OF PROJECT: BIN 5514049 (MP 23.53)

TITLE OF DRAWING: EARTHWORK SUMMARY SHEET

CONTRACT NUMBER: TANY 26-23B

DATE: JULY 2026

DRAWING NUMBER: ESS-01

DESIGN SUPERVISOR: RWL | DESIGNED BY: IW / MR / VZ | CHECKED BY: AICE | DRAFTED BY: IW / MR / VZ | CHECKED BY: AICE

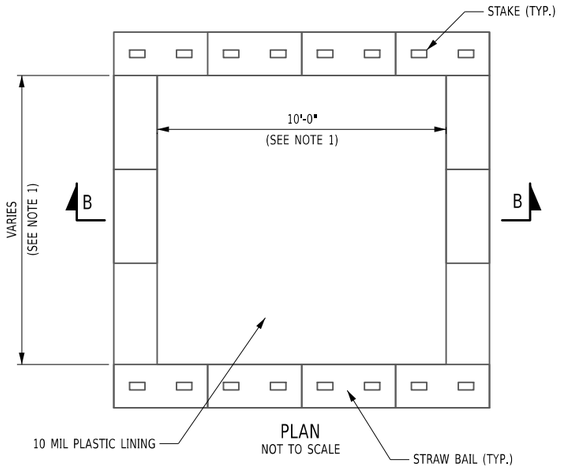

PLAN
NOT TO SCALE

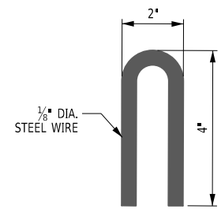

STAPLE DETAIL
NOT TO SCALE

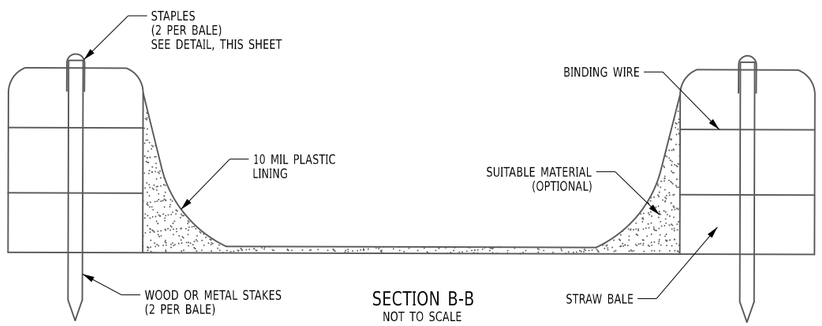

SECTION B-B
NOT TO SCALE

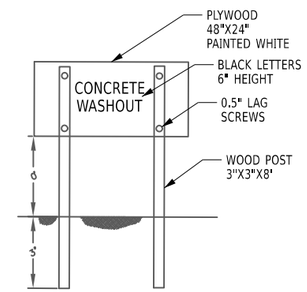

CONCRETE WASHOUT
SIGN DETAIL
OR EQUIVALENT
NOT TO SCALE

CONCRETE WASHOUT NOTES:

1. ACTUAL LAYOUT AND LOCATION TO BE DETERMINED IN FIELD.
2. THE CONCRETE WASHOUT SIGN SHALL BE INSTALLED WITHIN 5 FEET OF THE TEMPORARY CONCRETE WASHOUT FACILITY.
3. LOCATE WASHOUT AREA AT LEAST 50-FEET FROM STORM DRAINS, OPEN DITCHES, OR WATER BODIES. DO NOT ALLOW RUNOFF FROM THIS AREA BY CONSTRUCTING A TEMPORARY PIT OR BERMED AREA LARGE ENOUGH FOR LIQUID OR SOLID WASTE.
4. WASH OUT WASTES INTO THE TEMPORARY PIT WHERE THE CONCRETE CAN SET, BE BROKEN UP, AND THEN DISPOSED OF PROPERLY. TEMPORARY CONCRETE WASHOUT FACILITIES SHALL BE MAINTAINED TO PROVIDE ADEQUATE HOLDING CAPACITY WITH A MINIMUM FREEBOARD OF 4-INCHES.
5. TEMPORARY CONCRETE WASHOUT FACILITY (TYPE ABOVE GRADE) SHALL BE CONSTRUCTED AS SHOWN ON THE DETAILS WITH A RECOMMENDED MINIMUM LENGTH AND MINIMUM WIDTH OF 10-FEET, BUT WITH SUFFICIENT QUANTITY AND VOLUME TO CONTAIN ALL LIQUID AND CONCRETE WASTE GENERATED BY WASHOUT OPERATIONS.
6. STRAW BALES, WOOD STAKES, AND SANDBAG MATERIALS SHALL CONFORM TO THE PROVISIONS IN THE EROSION AND SEDIMENT CONTROL SPECIFICATION.
7. PLASTIC LINING MATERIAL SHALL BE A MINIMUM OF 10 MIL IN POLYETHYLENE SHEETING AND SHALL BE FREE OF HOLES, TEARS, OR OTHER DEFECTS THAT COMPROMISE THE IMPERMEABILITY OF THE MATERIAL.
8. HOLES, DEPRESSIONS, OR OTHER GROUND DISTURBANCE CAUSED BY THE REMOVAL OF THE TEMPORARY CONCRETE WASHOUT FACILITIES SHOULD BE BACKFILLED AND REPAIRED.
9. WASHOUT FACILITIES SHALL BE CLEANED, OR NEW FACILITIES SHALL BE CONSTRUCTED AND READY FOR USE ONCE THE WASHOUT IS 75% FULL.
10. THE COST FOR THE CONCRETE WASHOUTS SHALL BE INCLUDED IN THE PRICE BID FOR ALL CONCRETE ITEMS (555.0021, 557.1011, 557.1111, 569.04, 569.05, 582.0052, AND ANY OTHER CONCRETE ITEM).

CONCRETE WASHOUT DETAIL
NOT TO SCALE

STORMWATER POLLUTION PREVENTION CONTROL NOTES:

INSTALL SILT FENCING AS SHOWN ON THE PLANS AND AROUND THE PERIMETER OF ANY STOCKPILE AREAS AND ADD ADDITIONAL EROSION CONTROL MEASURES AS REQUIRED BY THE ENGINEER PRIOR TO PERFORMING ANY EARTH DISTURBANCE.

WHERE WORK IS SUSPENDED ON THE PROJECT, ALL AREAS OF SOIL DISTURBANCE SHALL BE STABILIZED PER ITEM 209.1003, TEMPORARY SEED AND MULCH, PRIOR TO SHUT DOWN.

ALL STOCKPILES SHALL BE ENCIRCLED WITH SILT FENCE AND COVERED WITH A TARP OR SEEDED AND MULCHED WITHIN 24HRS OF CREATION. COST OF WORK SHALL BE INCLUDED IN VARIOUS ITEMS IN THE CONTRACT.

CONTRACTOR SHALL CLEAN SEDIMENT AND DEBRIS OFF ALL PAVED SURFACES AT THE END OF EACH DAY OR AS DIRECTED BY ENGINEER. COST OF CLEANING SHALL BE INCLUDED IN VARIOUS ITEMS IN THE CONTRACT.

CONTRACTOR SHALL NOT WASH CONCRETE OR SLURRY TRUCKS, TOOLS, OR EQUIPMENT OUT ONTO BARE GROUND OR DIRECTLY INTO STORM OR SANITARY SEWER SYSTEMS (INCLUDING SWALES, DITCHES AND WETLANDS). EXCESS CONCRETE, SLURRY AND WASH WATER SHALL BE COLLECTED IN A WASH BASIN AND DISPOSED OF PROPERLY.

THE CONTRACTOR SHALL SUBMIT FOR APPROVAL TO THE ENGINEER THEIR WRITTEN SCHEDULE AND PROPOSED MEASURES FOR TEMPORARY AND PERMANENT EROSION AND SEDIMENT CONTROL WORK AND SCHEDULE OF OPERATIONS AS REQUIRED BY SECTION 209 OF THE NYSDOT STANDARD SPECIFICATIONS.

INSPECTION, PERIODIC CLEANING AND MAINTENANCE OF TEMPORARY SOIL EROSION AND POLLUTION CONTROL DEVICES SHALL BE PERFORMED ON A SCHEDULE BASIS IN ACCORDANCE WITH SECTION 209 OF THE NYSDOT STANDARD SPECIFICATIONS AND THE PROJECT'S SWPPP. THE COST OF INSTALLING, CLEANING AND REMOVING TEMPORARY SOIL EROSION AND WATER POLLUTION CONTROL DEVICES SHALL BE PAID FOR UNDER THE ITEMS SHOWN.

ALL NECESSARY PRECAUTIONS SHALL BE TAKEN TO PREVENT CONTAMINATION OF ANY STREAM OR WATERWAY BY SILT, SEDIMENT, FUELS, SOLVENTS, LUBRICANTS, EPOXY COATINGS, CONCRETE OR SLURRY LEACHATE OR ANY OTHER POLLUTANT ASSOCIATED WITH CONSTRUCTION AND CONSTRUCTION PROCEDURES.

PROJECT DISTURBANCE IS ANTICIPATED TO BE LESS THAN ONE (1) ACRE. THE CONTRACTOR WILL BE RESPONSIBLE FOR DEVELOPING A STORMWATER POLLUTION PREVENTION PLAN (SWPPP) AND NOTICE OF INTENT (NOI) IF THE DISTURBANCE GOES OVER ONE (1) ACRE.

ALL CONTROLS SHALL BE PLACED PRIOR TO STARTING EARTHWORK OPERATIONS AND SHALL REMAIN IN PLACE UNTIL NEW SLOPES ARE STABILIZED WITH SEEDING AND/OR SLOPE PROTECTION.

CONTRACTOR SHALL BE RESPONSIBLE FOR PROVIDING ANY ADDITIONAL EROSION CONTROL MEASURES THAT MAY BE REQUIRED OR AS ORDERED BY ENGINEER.

CONTRACTOR STAGING AREAS SHALL BE EXISTING AREAS OF NON DISTURBABLE COVER. (I.E. ASPHALT MILLING, ASPHALT OR CONCRETE PAVEMENT). IF THE CONTRACTOR CREATES A STAGING AREA ON DISTURBABLE COVER (I.E. GRASS) THEN THE ENTIRE AREA SHALL BE ENCLOSED WITH SILT FENCE.

CONTRACTORS SHALL ESTABLISH A STABILIZED CONSTRUCTION ENTRANCE INTO AND OUT OF EACH WORK AREA AND EACH STAGING AREA CONSTRUCTED ON DISTURBABLE COVER.

CONTRACTOR SHALL DECOMPACT ALL AREAS OF PAVEMENT OR IMPERVIOUS COVER REMOVAL THAT WILL BE MADE PERVIOUS COVER. DECOMPACTION SHALL BE ACCOMPLISHED BY DEEP RIPPING OR TILLING TO A DEPTH OF 1.5 FEET BELOW THE BOTTOM OF THE EXISTING SUBBASE LAYER IN ORDER TO REESTABLISH THE PERMIABILITY OF THE SOIL. THE COST OF DECOMPACTION SHALL BE INCLUDED IN THE COST OF PAVEMENT REMOVAL.

SOIL EROSION AND SEDIMENT CONTROL NOTES

1. THE CONTRACTOR SHALL SUBMIT SCHEDULES TO THE CONSTRUCTION ENVIRONMENTAL CONTACT (CEC) FOR PERFORMING ALL TEMPORARY AND PERMANENT SOIL EROSION AND SEDIMENT CONTROL WORK INCLUDING SEEDING AT THE PRECONSTRUCTION MEETING OR PRIOR TO THE START OF CONSTRUCTION. ALL WORK PERFORMED UNDER SECTION 209 SHALL BE INCLUDED AS PART OF THE CONSTRUCTION SCHEDULE SUBMITTED BY THE CONTRACTOR AS REQUIRED UNDER THE PROVISIONS OF SECTION 108-01 START AND PROGRESS OF WORK.
2. THE LOCATION OF SOIL EROSION AND SEDIMENT CONTROL MEASURES AS INDICATED IN THE CONTRACT DOCUMENTS MAY REQUIRE FIELD ADJUSTMENT DEPENDING ON THE SEQUENCE OF CONSTRUCTION ACTIVITIES, CONSTRUCTION METHODS, AND/OR ACTUAL FIELD CONDITIONS. THE CONSTRUCTION ENVIRONMENTAL CONTACT SHALL BE NOTIFIED OF ANY FIELD CHANGES TO THE EROSION AND SEDIMENT CONTROL MEASURES INDICATED IN THE CONTRACT DOCUMENTS PRIOR TO IMPLEMENTING ANY CHANGES.
3. ADDTIONAL EROSION CONTROL MEASURES MAY BE REQUIRED ADBE (AS DETERMINED BY ENGINEER) IN ADDITION TO THOSE SHOWN ON THE CONTRACT PLANS. PAYMENT FOR ADDTIONAL WORK SHALL BE PAID UNDER THE APPROPRIATE ITEMS IN THE CONTRACT.
4. THE ENGINEER MAY LIMIT THE AREA OF UNPROTECTED EARTH MATERIAL EXPOSED AT ANY ONE TIME CREATED BY CLEARING AND GRUBBING, EXCAVATION, BORROW, OR FILL, DEPENDING ON THE CONTRACTOR'S CAPABILITY AND PROGRESS IN COMPLETING THE FINISHED GRADE AND THE PROPER INSTALLATION AND MAINTENANCE OF TEMPORARY AND/OR PERMANENT EROSION CONTROL MEASURES, OR AS THE RESULT OF THE ANALYSIS OF PRODUCT CONDITIONS.
5. THE CONTRACTOR SHALL HAVE THE EQUIPMENT AND ABILITY ON SITE TO STABILIZE DISTURBED AREAS ON ANY GIVEN DAY IN THE EVENT OF INCLEMENT WEATHER.
6. THE CONTRACTOR SHALL SEED AND MULCH SLOPES WITH STRAW THAT IS VOID OF WEED SEED.
7. SEDIMENT FROM TEMPORARY STOCKPILES OF TOPSOIL OR FILL SHALL BE CONTAINED WITH SILT FENCE ON ALL DOWN SIDE GRADIENTS AWAY FROM THE STOCKPILE. PILES EXPOSED LONGER THAN ONE WEEK SHALL BE STABILIZED WITH A TEMPORARY SEEDING OR GROUND OVER PAYMENT FOR THIS WORK SHALL BE INCLUDED IN THE PRICE BID FOR THE TOPSOIL OR FILL ITEMS.

ALTERED ON:	AFFIXED ON: 08/10/2026
SIGNATURE: STAMP:	SIGNATURE: STAMP: STATE OF NEW YORK · EDWIN TWISS · EXCELSIOR · 080650 · LICENSED PROFESSIONAL ENGINEER

IT IS A VIOLATION OF LAW FOR ANY PERSON, UNLESS THEY ARE ACTING UNDER THE DIRECTION OF A LICENSED PROFESSIONAL ENGINEER, ARCHITECT, LANDSCAPE ARCHITECT, OR LAND SURVEYOR, TO ALTER AN ITEM IN ANY WAY. IF AN ITEM BEARING THE STAMP OF A LICENSED PROFESSIONAL IS ALTERED, THE ALTERING ENGINEER, ARCHITECT, LANDSCAPE ARCHITECT, OR LAND SURVEYOR SHALL STAMP THE DOCUMENT AND INCLUDE THE NOTATION "ALTERED BY" FOLLOWED BY THEIR SIGNATURE, THE DATE OF SUCH ALTERATION, AND A SPECIFIC DESCRIPTION OF THE ALTERATION.

REVISIONS

DATE	DESCRIPTION	BY	SYM.

NEW YORK STATE | Thruway Authority

AECOM

TITLE OF PROJECT
SUPERSTRUCTURE REPLACEMENT
GSP CONNECTOR OVER NYS THRUWAY

LOCATION OF PROJECT
BIN 5514049 (MP 23.53)

TITLE OF DRAWING
EROSION AND SEDIMENT CONTROL DETAILS

CONTRACT NUMBER: TANY 26-23B

DATE: JULY 2026

DRAWING NUMBER: ESN-01

DESIGN SUPERVISOR: RWL | DESIGNED BY: IW / MR / VZ | CHECKED BY: | DRAFTED BY: AJCE | CHECKED BY: IW / MR / VZ | CHECKED BY: AJCE

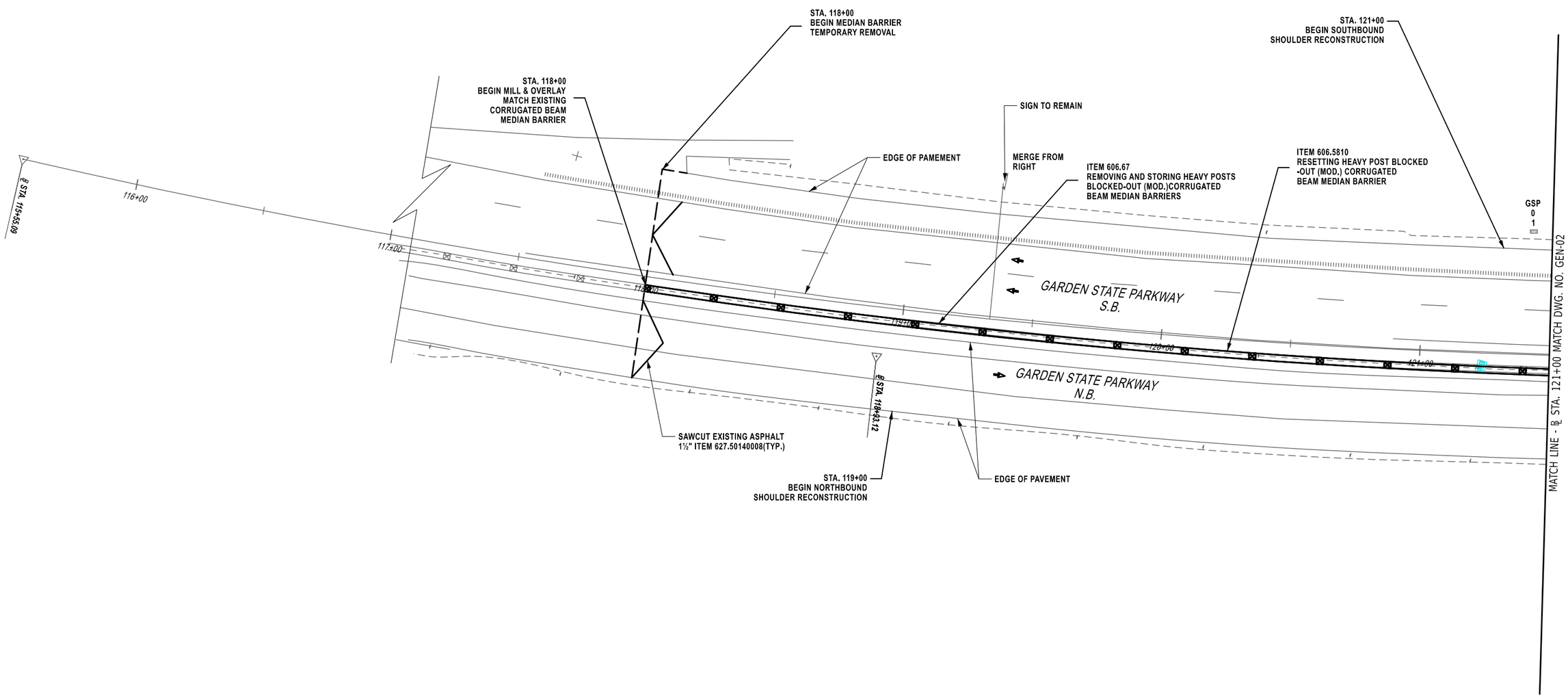

20 0 20 40 60 80'

1" = 40'

ALTERED ON:	AFFIXED ON: 07/09/2026 08/10/2026
SIGNATURE: STAMP:	SIGNATURE: GERARD J. SENTZ, PE STAMP:

STATE OF NEW YORK
GERARD SENTZ
062576
LICENSED PROFESSIONAL ENGINEER

IT IS A VIOLATION OF LAW FOR ANY PERSON, UNLESS THEY ARE ACTING UNDER THE DIRECTION OF A LICENSED PROFESSIONAL ENGINEER, ARCHITECT, LANDSCAPE ARCHITECT, OR LAND SURVEYOR, TO ALTER AN ITEM IN ANY WAY. IF AN ITEM BEARING THE STAMP OF A LICENSED PROFESSIONAL IS ALTERED, THE ALTERING ENGINEER, ARCHITECT, LANDSCAPE ARCHITECT, OR LAND SURVEYOR SHALL STAMP THE DOCUMENT AND INCLUDE THE NOTATION "ALTERED BY" FOLLOWED BY THEIR SIGNATURE, THE DATE OF SUCH ALTERATION, AND A SPECIFIC DESCRIPTION OF THE ALTERATION.

REVISIONS

DATE	DESCRIPTION	BY	SYM.

NEW YORK STATE | Thruway Authority

AZAR DESIGN CO

TITLE OF PROJECT
SUPERSTRUCTURE REPLACEMENT
GSP CONNECTOR OVER NYS THRUWAY

LOCATION OF PROJECT
BIN 5514049 (MP 23.53)

TITLE OF DRAWING
GENERAL PLAN

CONTRACT NUMBER: TANY 26-23B

DATE: JULY 2026

DRAWING NUMBER: GEN-01

CHECKED BY:
DRAFTED BY:
CHECKED BY:
DESIGNED BY:
DESIGN SUPERVISOR:

PRINTED ON: 4-AUG-2026 12:44 PRINTED BY: bwolfe PIN: XXXXXX

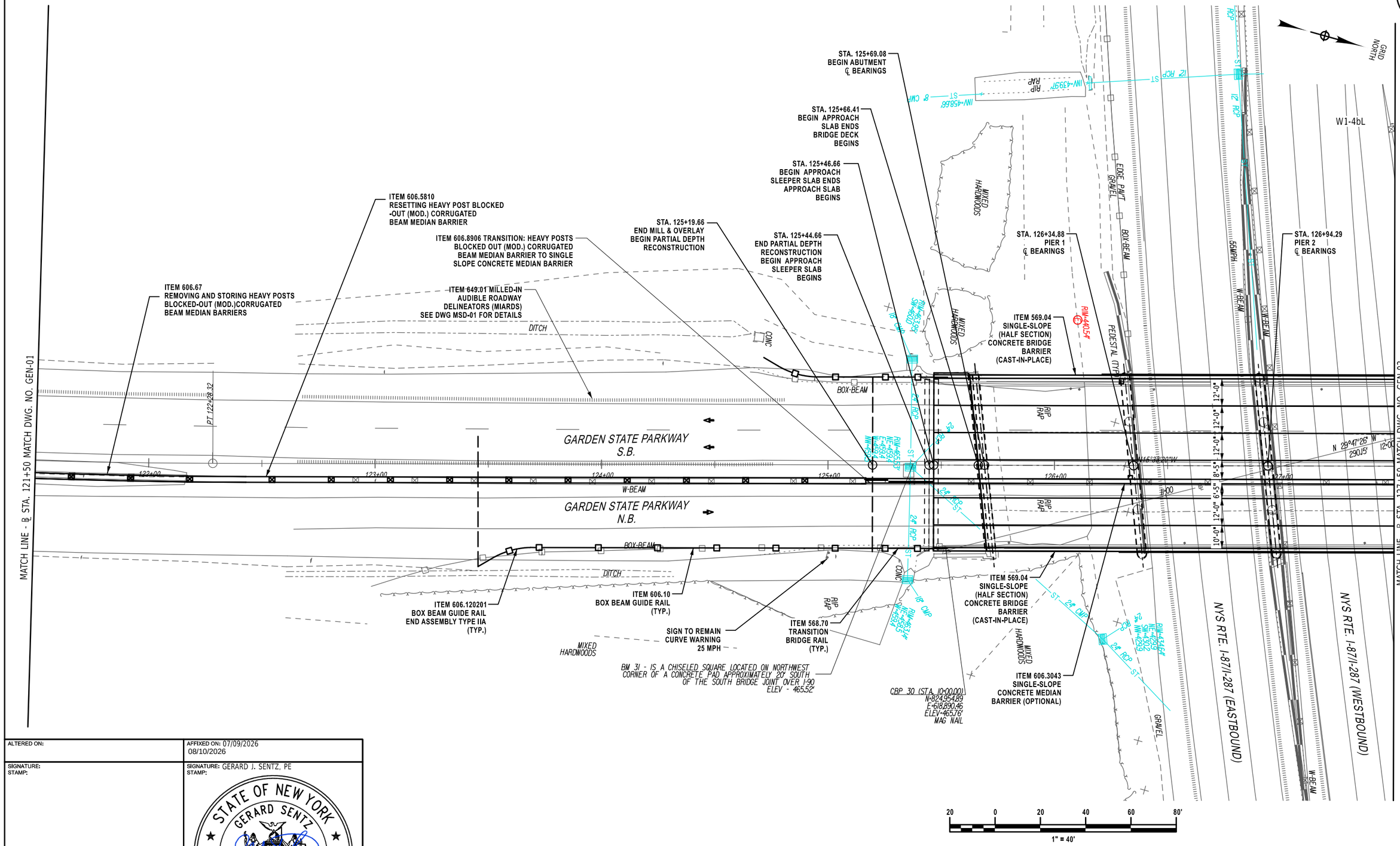

ALTERED ON:	AFFIXED ON: 07/09/2026 08/10/2026
SIGNATURE: STAMP:	SIGNATURE: GERARD J. SENTZ, PE STAMP: STATE OF NEW YORK · GERARD SENTZ · 062576 · LICENSED PROFESSIONAL ENGINEER

IT IS A VIOLATION OF LAW FOR ANY PERSON, UNLESS THEY ARE ACTING UNDER THE DIRECTION OF A LICENSED PROFESSIONAL ENGINEER, ARCHITECT, LANDSCAPE ARCHITECT, OR LAND SURVEYOR, TO ALTER AN ITEM IN ANY WAY. IF AN ITEM BEARING THE STAMP OF A LICENSED PROFESSIONAL IS ALTERED, THE ALTERING ENGINEER, ARCHITECT, LANDSCAPE ARCHITECT, OR LAND SURVEYOR SHALL STAMP THE DOCUMENT AND INCLUDE THE NOTATION "ALTERED BY" FOLLOWED BY THEIR SIGNATURE, THE DATE OF SUCH ALTERATION, AND A SPECIFIC DESCRIPTION OF THE ALTERATION.

REVISIONS

DATE	DESCRIPTION	BY	SYM.

NEW YORK STATE | Thruway Authority

AZAR DESIGN CO

TITLE OF PROJECT
SUPERSTRUCTURE REPLACEMENT
GSP CONNECTOR OVER NYS THRUWAY

LOCATION OF PROJECT
BIN 5514049 (MP 23.53)

TITLE OF DRAWING
GENERAL PLAN

CONTRACT NUMBER: TANY 26-23B

DATE: JULY 2026

DRAWING NUMBER: GEN-02

CHECKED BY:
DRAFTED BY:
CHECKED BY:
DESIGNED BY:
DESIGN SUPERVISOR:
PRINTED ON: 4-AUG-2026 12:44 PRINTED BY: bwolfe PN: XXXXXX

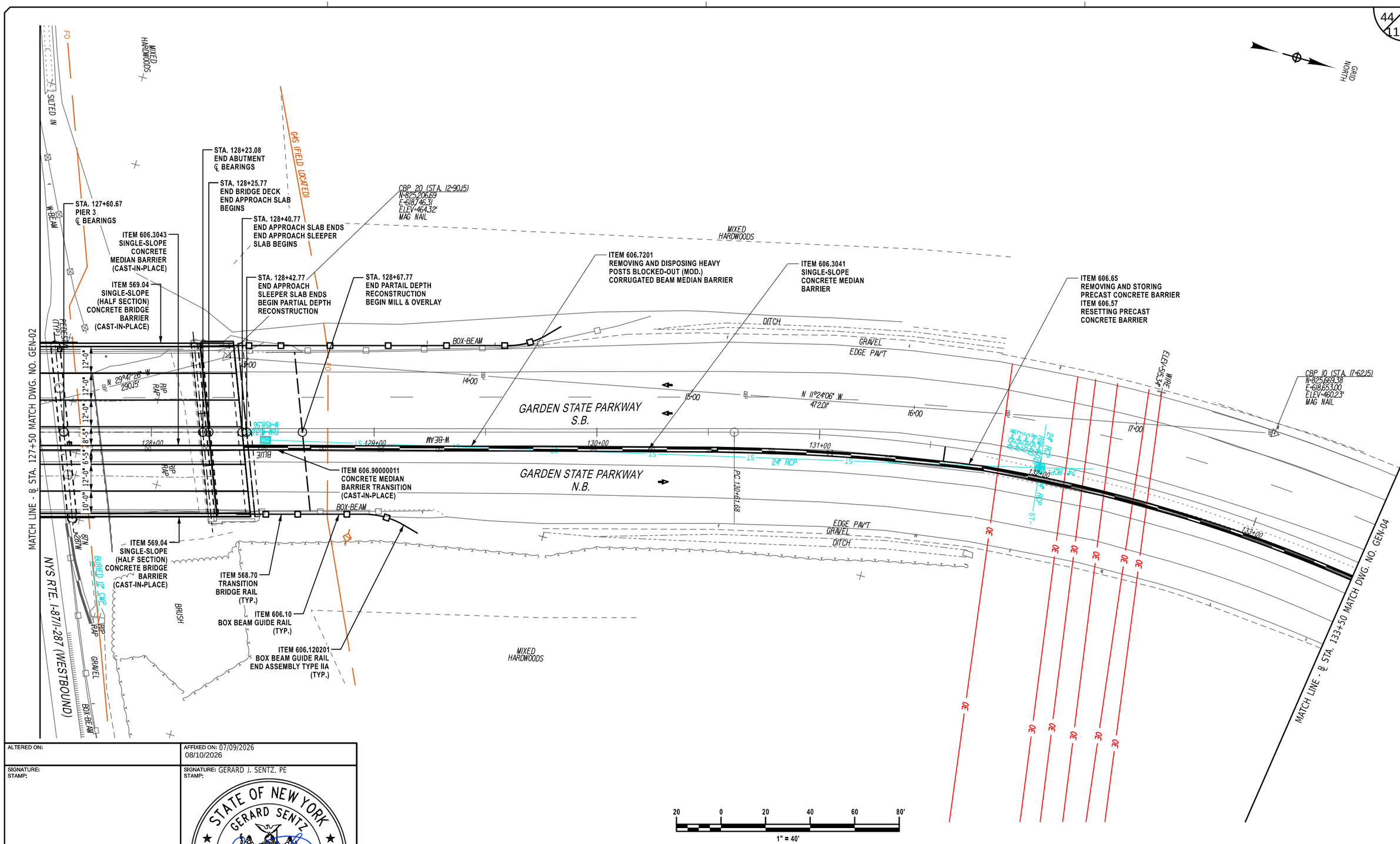

ALTERED ON:	AFFIXED ON: 07/09/2026 08/10/2026
SIGNATURE: STAMP:	SIGNATURE: GERARD J. SENTZ, PE STAMP: STATE OF NEW YORK · GERARD SENTZ · REGISTERED · 062576 · LICENSED PROFESSIONAL ENGINEER

IT IS A VIOLATION OF LAW FOR ANY PERSON, UNLESS THEY ARE ACTING UNDER THE DIRECTION OF A LICENSED PROFESSIONAL ENGINEER, ARCHITECT, LANDSCAPE ARCHITECT, OR LAND SURVEYOR, TO ALTER AN ITEM IN ANY WAY. IF AN ITEM BEARING THE STAMP OF A LICENSED PROFESSIONAL IS ALTERED, THE ALTERING ENGINEER, ARCHITECT, LANDSCAPE ARCHITECT, OR LAND SURVEYOR SHALL STAMP THE DOCUMENT AND INCLUDE THE NOTATION "ALTERED BY" FOLLOWED BY THEIR SIGNATURE, THE DATE OF SUCH ALTERATION, AND A SPECIFIC DESCRIPTION OF THE ALTERATION.

REVISIONS

DATE	DESCRIPTION	BY	SYM.

NEW YORK STATE | Thruway Authority

AZAR DESIGN CO

TITLE OF PROJECT
SUPERSTRUCTURE REPLACEMENT
GSP CONNECTOR OVER NYS THRUWAY

LOCATION OF PROJECT
BIN 5514049 (MP 23.53)

TITLE OF DRAWING
GENERAL PLAN

CONTRACT NUMBER: TANY 26-23B

DATE: JULY 2026

DRAWING NUMBER: GEN-03

CHECKED BY:
DRAFTED BY:
CHECKED BY:
DESIGNED BY:
DESIGN SUPERVISOR:

PRINTED ON: 4-AUG-2026 12:45 PRINTED BY: bwalls PIN: XXXXXX

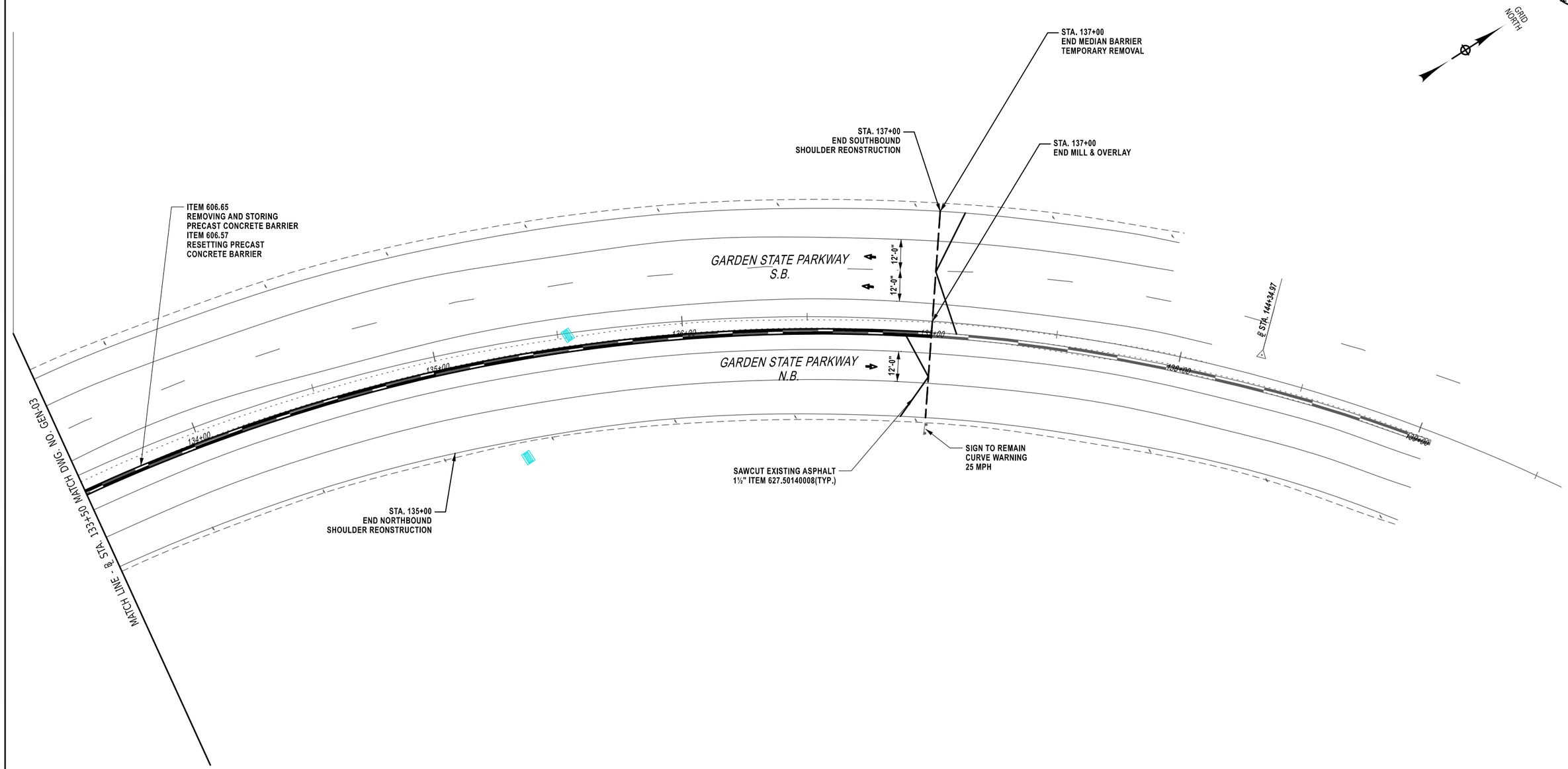

20 0 20 40 60 80'

1" = 40'

ALTERED ON:	AFFIXED ON: 07/09/2026 08/10/2026
SIGNATURE: STAMP:	SIGNATURE: GERARD J. SENTZ, PE STAMP:

STATE OF NEW YORK
GERARD SENTZ
062576
LICENSED PROFESSIONAL ENGINEER

IT IS A VIOLATION OF LAW FOR ANY PERSON, UNLESS THEY ARE ACTING UNDER THE DIRECTION OF A LICENSED PROFESSIONAL ENGINEER, ARCHITECT, LANDSCAPE ARCHITECT, OR LAND SURVEYOR, TO ALTER AN ITEM IN ANY WAY. IF AN ITEM BEARING THE STAMP OF A LICENSED PROFESSIONAL IS ALTERED, THE ALTERING ENGINEER, ARCHITECT, LANDSCAPE ARCHITECT, OR LAND SURVEYOR SHALL STAMP THE DOCUMENT AND INCLUDE THE NOTATION "ALTERED BY" FOLLOWED BY THEIR SIGNATURE, THE DATE OF SUCH ALTERATION, AND A SPECIFIC DESCRIPTION OF THE ALTERATION.

REVISIONS

DATE	DESCRIPTION	BY	SYM.

NEW YORK STATE | Thruway Authority

AZAR DESIGN CO

TITLE OF PROJECT
SUPERSTRUCTURE REPLACEMENT
GSP CONNECTOR OVER NYS THRUWAY

LOCATION OF PROJECT
BIN 5514049 (MP 23.53)

TITLE OF DRAWING
GENERAL PLAN

CONTRACT NUMBER: TANY 26-23B

DATE: JULY 2026

DRAWING NUMBER: GEN-04

CHECKED BY:
DRAFTED BY:
CHECKED BY:
DESIGNED BY:
DESIGN SUPERVISOR:

PRINTED ON: 4-AUG-2026 12:45 PRINTED BY: bwolfe PIN: XXXXXX

GRID NORTH

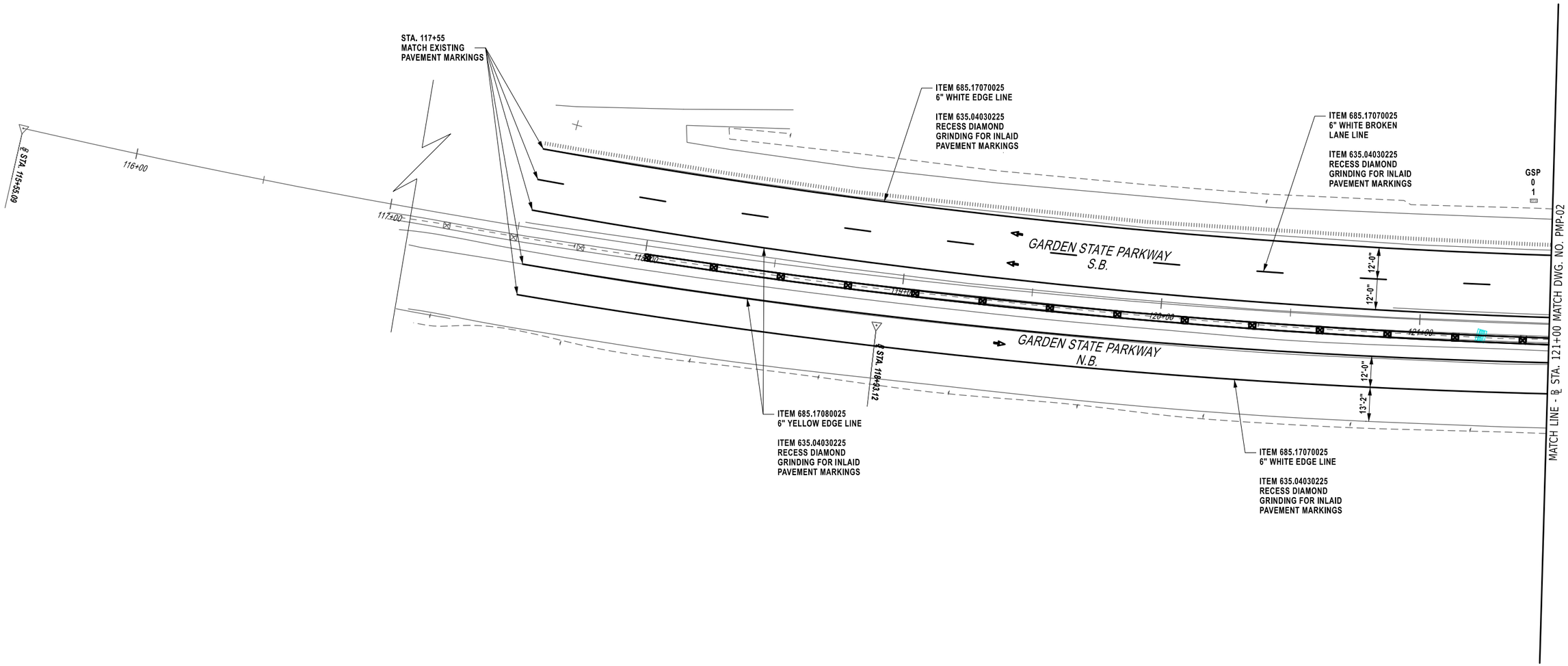

20 0 20 40 60 80'

1" = 40'

ALTERED ON:	AFFIXED ON: 07/09/2026 08/10/2026
SIGNATURE: STAMP:	SIGNATURE: GERARD J. SENTZ, PE STAMP:

STATE OF NEW YORK
GERARD SENTZ
062576
LICENSED PROFESSIONAL ENGINEER

IT IS A VIOLATION OF LAW FOR ANY PERSON, UNLESS THEY ARE ACTING UNDER THE DIRECTION OF A LICENSED PROFESSIONAL ENGINEER, ARCHITECT, LANDSCAPE ARCHITECT, OR LAND SURVEYOR, TO ALTER AN ITEM IN ANY WAY. IF AN ITEM BEARING THE STAMP OF A LICENSED PROFESSIONAL IS ALTERED, THE ALTERING ENGINEER, ARCHITECT, LANDSCAPE ARCHITECT, OR LAND SURVEYOR SHALL STAMP THE DOCUMENT AND INCLUDE THE NOTATION "ALTERED BY" FOLLOWED BY THEIR SIGNATURE, THE DATE OF SUCH ALTERATION, AND A SPECIFIC DESCRIPTION OF THE ALTERATION.

REVISIONS

DATE	DESCRIPTION	BY	SYM.

NEW YORK STATE | Thruway Authority

AZAR DESIGN CO

TITLE OF PROJECT
SUPERSTRUCTURE REPLACEMENT
GSP CONNECTOR OVER NYS THRUWAY

LOCATION OF PROJECT
BIN 5514049 (MP 23.53)

TITLE OF DRAWING
PAVEMENT MARKING PLAN

CONTRACT NUMBER:
TANY 26-23B

DATE:
JULY 2026

DRAWING NUMBER:
PMP-01

CHECKED BY:
DRAFTED BY:
CHECKED BY:
DESIGNED BY:
DESIGN SUPERVISOR:

PRINTED ON: 4-AUG-2026 12:45 PRINTED BY: bwolfe PIN: XXXXXX

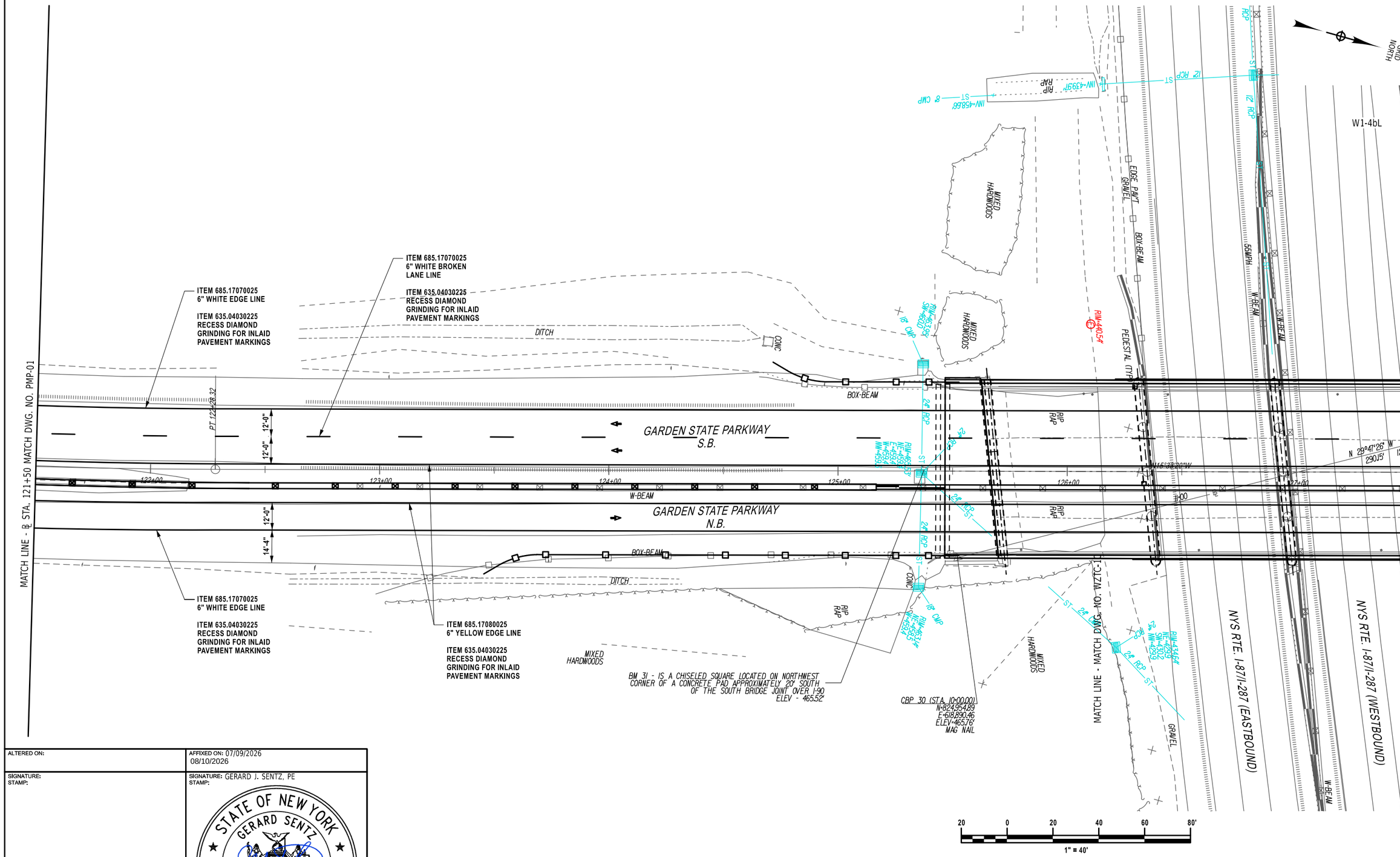

ALTERED ON:	AFFIXED ON: 07/09/2026 08/10/2026
SIGNATURE: STAMP:	SIGNATURE: GERARD J. SENTZ, PE STAMP:

STATE OF NEW YORK
GERARD SENTZ
062576
LICENSED PROFESSIONAL ENGINEER

IT IS A VIOLATION OF LAW FOR ANY PERSON, UNLESS THEY ARE ACTING UNDER THE DIRECTION OF A LICENSED PROFESSIONAL ENGINEER, ARCHITECT, LANDSCAPE ARCHITECT, OR LAND SURVEYOR, TO ALTER AN ITEM IN ANY WAY. IF AN ITEM BEARING THE STAMP OF A LICENSED PROFESSIONAL IS ALTERED, THE ALTERING ENGINEER, ARCHITECT, LANDSCAPE ARCHITECT, OR LAND SURVEYOR SHALL STAMP THE DOCUMENT AND INCLUDE THE NOTATION "ALTERED BY" FOLLOWED BY THEIR SIGNATURE, THE DATE OF SUCH ALTERATION, AND A SPECIFIC DESCRIPTION OF THE ALTERATION.

REVISIONS

DATE	DESCRIPTION	BY	SYM.

NEW YORK STATE | Thruway Authority

AZAR DESIGN CO

TITLE OF PROJECT
SUPERSTRUCTURE REPLACEMENT
GSP CONNECTOR OVER NYS THRUWAY

LOCATION OF PROJECT
BIN 5514049 (MP 23.53)

TITLE OF DRAWING
PAVEMENT MARKING PLAN

CONTRACT NUMBER: TANY 26-23B

DATE: JULY 2026

DRAWING NUMBER: **PMP-02**

CHECKED BY:
DRAFTED BY:
CHECKED BY:
DESIGNED BY:
DESIGN SUPERVISOR:
PRINTED ON: 4-AUG-2026 12:45 PRINTED BY: bwolfe PIN: XXXXXX

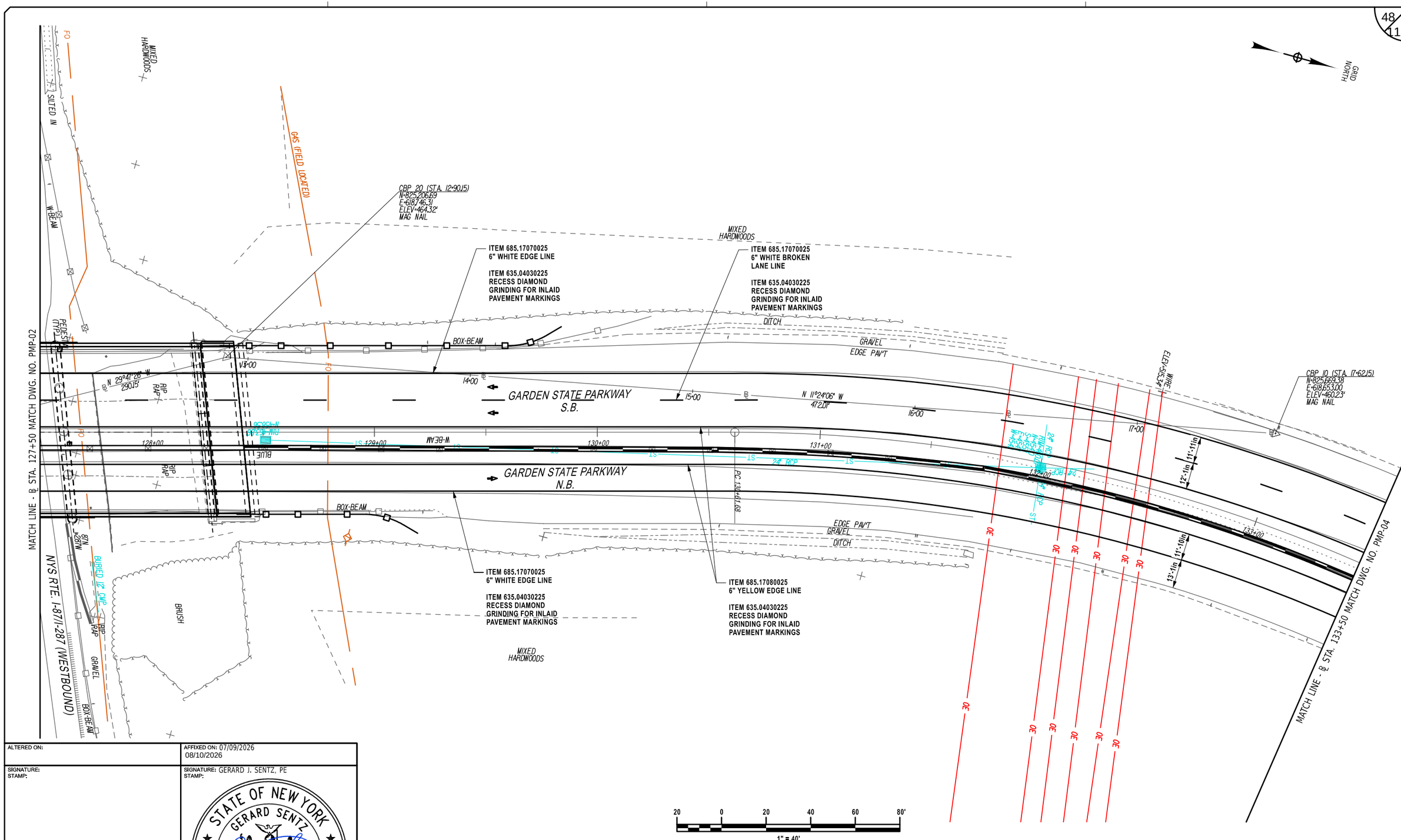

CHECKED BY:
DRAFTED BY:
DESIGNED BY:
DESIGN SUPERVISOR:

PRINTED ON: 4-AUG-2026 12:45 PRINTED BY: bwolfe PIN: XXXXXX

ALTERED ON:	AFFIXED ON: 07/09/2026 08/10/2026
SIGNATURE: STAMP:	SIGNATURE: GERARD J. SENTZ, PE STAMP: STATE OF NEW YORK · GERARD SENTZ · REGISTRATION 062576 · LICENSED PROFESSIONAL ENGINEER

IT IS A VIOLATION OF LAW FOR ANY PERSON, UNLESS THEY ARE ACTING UNDER THE DIRECTION OF A LICENSED PROFESSIONAL ENGINEER, ARCHITECT, LANDSCAPE ARCHITECT, OR LAND SURVEYOR, TO ALTER AN ITEM IN ANY WAY. IF AN ITEM BEARING THE STAMP OF A LICENSED PROFESSIONAL IS ALTERED, THE ALTERING ENGINEER, ARCHITECT, LANDSCAPE ARCHITECT, OR LAND SURVEYOR SHALL STAMP THE DOCUMENT AND INCLUDE THE NOTATION "ALTERED BY" FOLLOWED BY THEIR SIGNATURE, THE DATE OF SUCH ALTERATION, AND A SPECIFIC DESCRIPTION OF THE ALTERATION.

REVISIONS

DATE	DESCRIPTION	BY	SYM.

NEW YORK STATE | Thruway Authority

AZAR DESIGN CO

TITLE OF PROJECT
SUPERSTRUCTURE REPLACEMENT
GSP CONNECTOR OVER NYS THRUWAY

LOCATION OF PROJECT
BIN 5514049 (MP 23.53)

TITLE OF DRAWING
PAVEMENT MARKING PLAN

CONTRACT NUMBER: TANY 26-23B

DATE: JULY 2026

DRAWING NUMBER: PMP-03

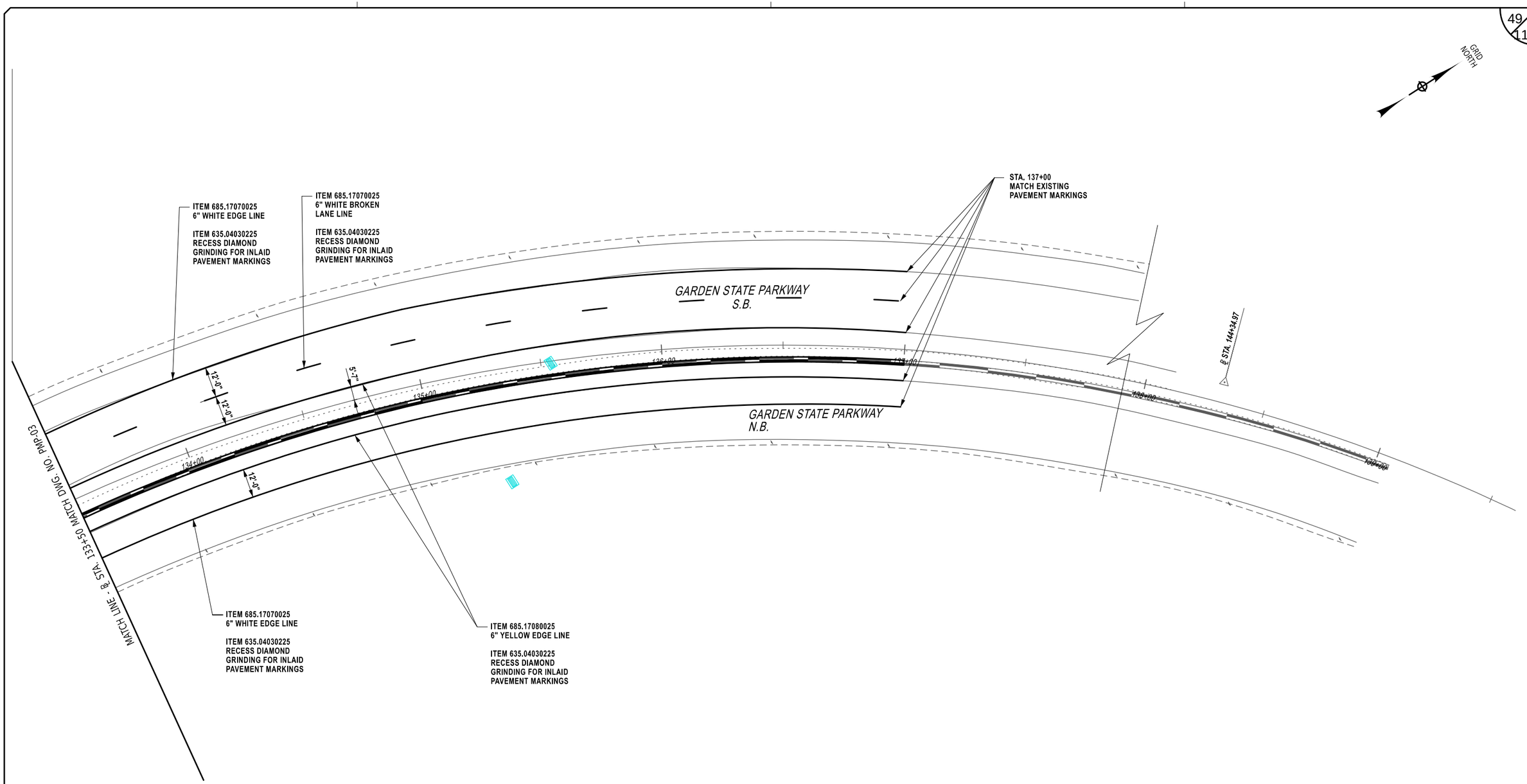

20 0 20 40 60 80'

1" = 40'

CHECKED BY:

DRAFTED BY:

CHECKED BY:

DESIGNED BY:

DESIGN SUPERVISOR:

PRINTED ON: 4-AUG-2026 12:45 PRINTED BY: bwolfe PIN: XXXXXX

ALTERED ON:	AFFIXED ON: 07/09/2026 08/10/2026
SIGNATURE: STAMP:	SIGNATURE: GERARD J. SENTZ, PE STAMP: STATE OF NEW YORK · GERARD SENTZ · REGISTRATION 062576 · LICENSED PROFESSIONAL ENGINEER

IT IS A VIOLATION OF LAW FOR ANY PERSON, UNLESS THEY ARE ACTING UNDER THE DIRECTION OF A LICENSED PROFESSIONAL ENGINEER, ARCHITECT, LANDSCAPE ARCHITECT, OR LAND SURVEYOR, TO ALTER AN ITEM IN ANY WAY. IF AN ITEM BEARING THE STAMP OF A LICENSED PROFESSIONAL IS ALTERED, THE ALTERING ENGINEER, ARCHITECT, LANDSCAPE ARCHITECT, OR LAND SURVEYOR SHALL STAMP THE DOCUMENT AND INCLUDE THE NOTATION "ALTERED BY" FOLLOWED BY THEIR SIGNATURE, THE DATE OF SUCH ALTERATION, AND A SPECIFIC DESCRIPTION OF THE ALTERATION.

REVISIONS

DATE	DESCRIPTION	BY	SYM.

NEW YORK STATE | Thruway Authority

AZAR DESIGN CO

TITLE OF PROJECT
SUPERSTRUCTURE REPLACEMENT
GSP CONNECTOR OVER NYS THRUWAY

LOCATION OF PROJECT
BIN 5514049 (MP 23.53)

TITLE OF DRAWING
PAVEMENT MARKING PLAN

CONTRACT NUMBER: TANY 26-23B

DATE: JULY 2026

DRAWING NUMBER: PMP-04

SIGN TABLE

SIGN	STATION	SIZE (IN)	MUTCD DESIGNATION	NUMBER OF POSTS
	119+33	48x48	W4-1R	2
	125+00	36x36	W1-2R	2
	125+00	24x24	W13-1	2

DESIGN SUPERVISOR:
DESIGNED BY:
CHECKED BY:
DRAFTED BY:
CHECKED BY:

PRINTED ON: 4-AUG-2026 12:45 PRINTED BY: bwolfe PIN: XXXXXX

ALTERED ON:	AFFIXED ON: 07/09/2026 08/10/2026
SIGNATURE: STAMP:	SIGNATURE: GERARD J. SENTZ, PE STAMP:

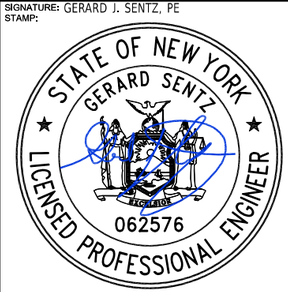

IT IS A VIOLATION OF LAW FOR ANY PERSON, UNLESS THEY ARE ACTING UNDER THE DIRECTION OF A LICENSED PROFESSIONAL ENGINEER, ARCHITECT, LANDSCAPE ARCHITECT, OR LAND SURVEYOR, TO ALTER AN ITEM IN ANY WAY. IF AN ITEM BEARING THE STAMP OF A LICENSED PROFESSIONAL IS ALTERED, THE ALTERING ENGINEER, ARCHITECT, LANDSCAPE ARCHITECT, OR LAND SURVEYOR SHALL STAMP THE DOCUMENT AND INCLUDE THE NOTATION "ALTERED BY" FOLLOWED BY THEIR SIGNATURE, THE DATE OF SUCH ALTERATION, AND A SPECIFIC DESCRIPTION OF THE ALTERATION.

REVISIONS

DATE	DESCRIPTION	BY	SYM.

NEW YORK STATE | Thruway Authority

AZAR DESIGN CO

TITLE OF PROJECT
SUPERSTRUCTURE REPLACEMENT
GSP CONNECTOR OVER NYS THRUWAY

LOCATION OF PROJECT
BIN 5514049 (MP 23.53)

TITLE OF DRAWING
SIGN DATA TABLE

CONTRACT NUMBER: TANY 26-23B

DATE: JULY 2026

DRAWING NUMBER: SDT-01

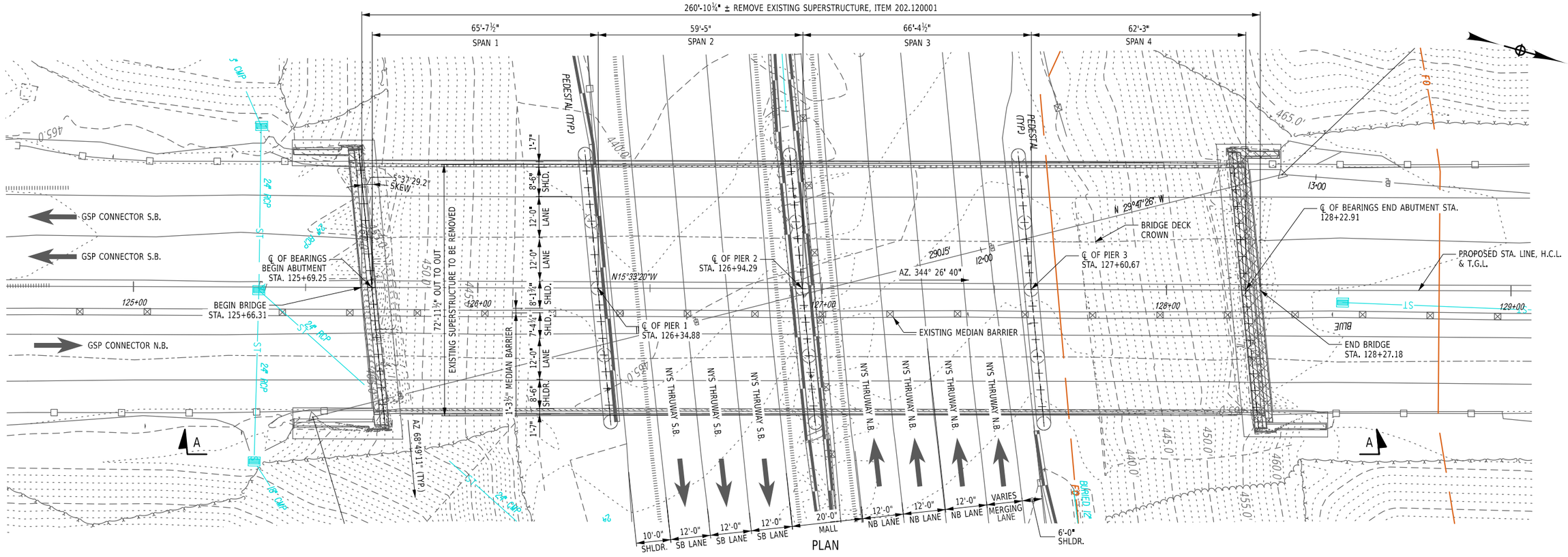

ALTERED ON:

AFFIXED ON: 08/10/2026

SIGNATURE:
STAMP:

SIGNATURE:
STAMP:

STATE OF NEW YORK · EDWIN TWISS · EXCELSIOR · 080650 · LICENSED PROFESSIONAL ENGINEER

IT IS A VIOLATION OF LAW FOR ANY PERSON, UNLESS THEY ARE ACTING UNDER THE DIRECTION OF A LICENSED PROFESSIONAL ENGINEER, ARCHITECT, LANDSCAPE ARCHITECT, OR LAND SURVEYOR, TO ALTER AN ITEM IN ANY WAY. IF AN ITEM BEARING THE STAMP OF A LICENSED PROFESSIONAL IS ALTERED, THE ALTERING ENGINEER, ARCHITECT, LANDSCAPE ARCHITECT, OR LAND SURVEYOR SHALL STAMP THE DOCUMENT AND INCLUDE THE NOTATION "ALTERED BY" FOLLOWED BY THEIR SIGNATURE, THE DATE OF SUCH ALTERATION, AND A SPECIFIC DESCRIPTION OF THE ALTERATION.

REVISIONS

DATE	DESCRIPTION	BY	SYM.

NEW YORK STATE | Thruway Authority

AECOM

TITLE OF PROJECT
SUPERSTRUCTURE REPLACEMENT
GSP CONNECTOR OVER NYS THRUWAY

LOCATION OF PROJECT
BIN 5514049 (MP 23.53)

TITLE OF DRAWING
EXISTING PLAN AND ELEVATION

CONTRACT NUMBER: TANY 26-23B

DATE: JULY 2026

DRAWING NUMBER: ST-01

AICE | CHECKED BY: | IW / MR / VZ | DRAFTED BY: | AICE | CHECKED BY: | IW / MR / VZ | DESIGNED BY: | RWL | DESIGN SUPERVISOR:

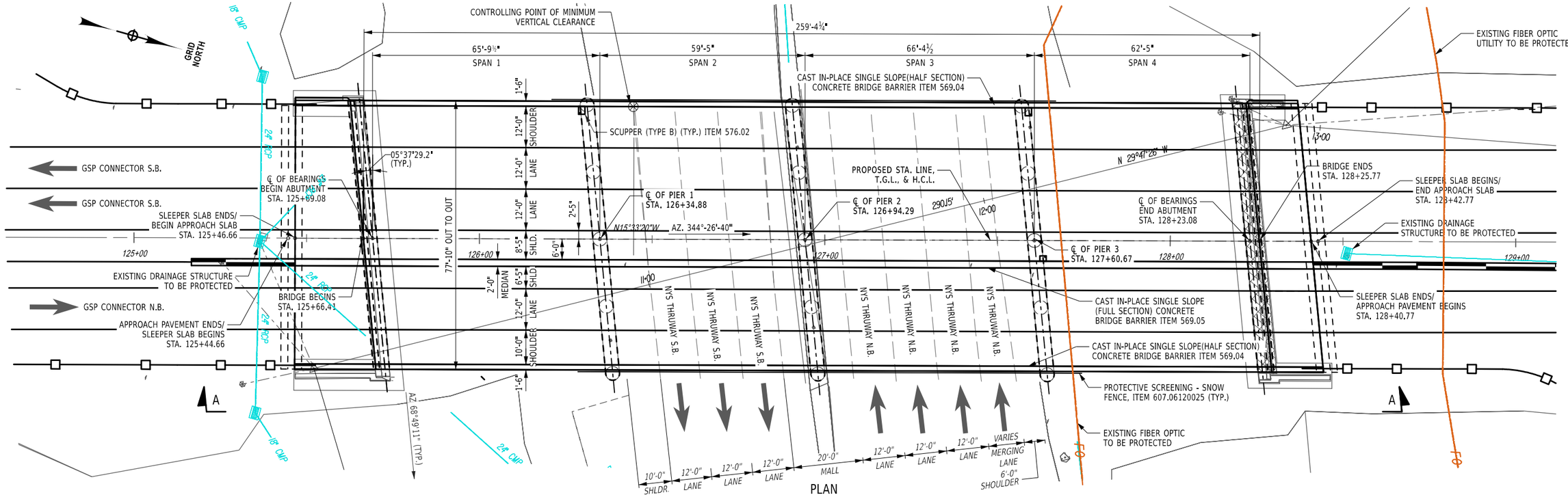

PLAN

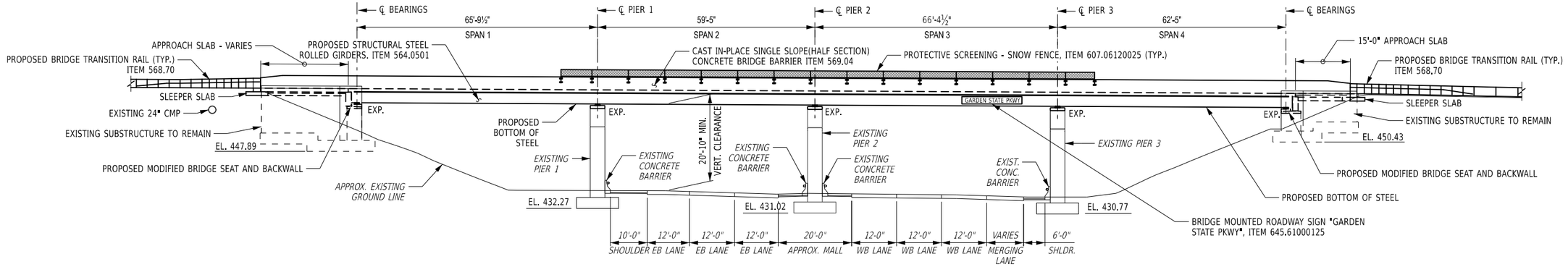

ELEVATION A-A

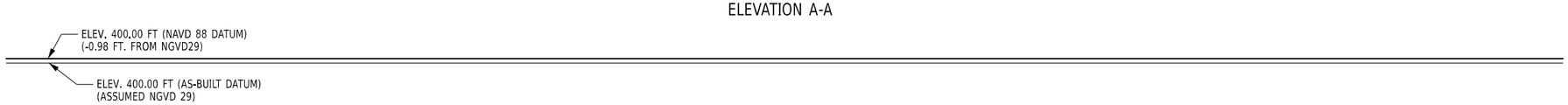

15 0 15 30 45 60'
1" = 30'

ALTERED ON:	AFFIXED ON: 08/10/2026
SIGNATURE: STAMP:	SIGNATURE: STAMP: STATE OF NEW YORK · EDWIN TWISS · 080650 · LICENSED PROFESSIONAL ENGINEER

IT IS A VIOLATION OF LAW FOR ANY PERSON, UNLESS THEY ARE ACTING UNDER THE DIRECTION OF A LICENSED PROFESSIONAL ENGINEER, ARCHITECT, LANDSCAPE ARCHITECT, OR LAND SURVEYOR, TO ALTER AN ITEM IN ANY WAY. IF AN ITEM BEARING THE STAMP OF A LICENSED PROFESSIONAL IS ALTERED, THE ALTERING ENGINEER, ARCHITECT, LANDSCAPE ARCHITECT, OR LAND SURVEYOR SHALL STAMP THE DOCUMENT AND INCLUDE THE NOTATION "ALTERED BY" FOLLOWED BY THEIR SIGNATURE, THE DATE OF SUCH ALTERATION, AND A SPECIFIC DESCRIPTION OF THE ALTERATION.

REVISIONS

DATE	DESCRIPTION	BY	SYM.

NEW YORK STATE | Thruway Authority

AECOM

TITLE OF PROJECT: SUPERSTRUCTURE REPLACEMENT GSP CONNECTOR OVER NYS THRUWAY

LOCATION OF PROJECT: BIN 5514049 (MP 23.53)

TITLE OF DRAWING: PROPOSED PLAN AND ELEVATION

CONTRACT NUMBER: TANY 26-23B

DATE: JULY 2026

DRAWING NUMBER: ST-02

AICE CHECKED BY: IW / MR / VZ DRAFTED BY: AICE CHECKED BY: IW / MR / VZ DESIGNED BY: RWL DESIGN SUPERVISOR:

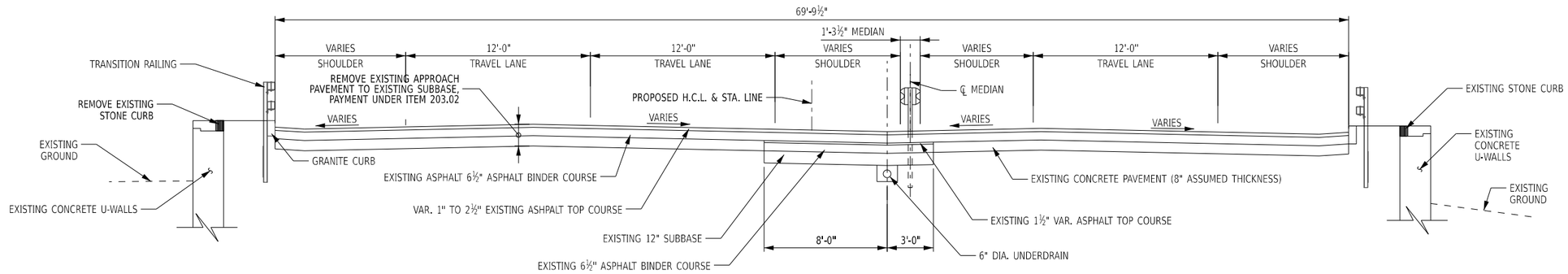

EXISTING BRIDGE APPROACH SECTION

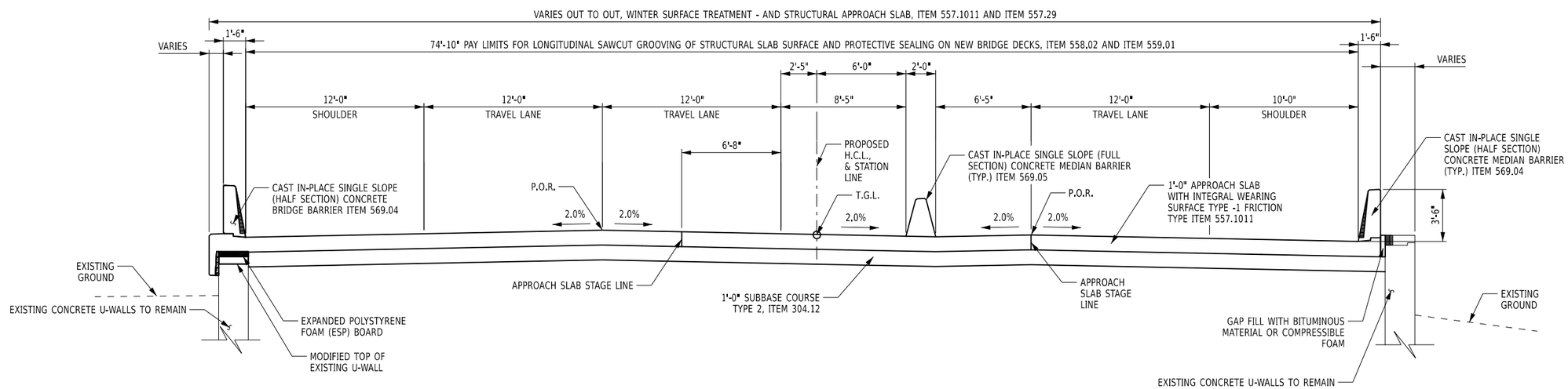

PROPOSED BRIDGE APPROACH SECTION

4 0 4 8 12 16'

1/8" = 1'

ALTERED ON:	AFFIXED ON: 08/10/2026
SIGNATURE: STAMP:	SIGNATURE: STAMP: STATE OF NEW YORK · EDWIN TWISS · 080650 · LICENSED PROFESSIONAL ENGINEER

IT IS A VIOLATION OF LAW FOR ANY PERSON, UNLESS THEY ARE ACTING UNDER THE DIRECTION OF A LICENSED PROFESSIONAL ENGINEER, ARCHITECT, LANDSCAPE ARCHITECT, OR LAND SURVEYOR, TO ALTER AN ITEM IN ANY WAY. IF AN ITEM BEARING THE STAMP OF A LICENSED PROFESSIONAL IS ALTERED, THE ALTERING ENGINEER, ARCHITECT, LANDSCAPE ARCHITECT, OR LAND SURVEYOR SHALL STAMP THE DOCUMENT AND INCLUDE THE NOTATION "ALTERED BY" FOLLOWED BY THEIR SIGNATURE, THE DATE OF SUCH ALTERATION, AND A SPECIFIC DESCRIPTION OF THE ALTERATION.

REVISIONS

DATE	DESCRIPTION	BY	SYM.

NEW YORK STATE | Thruway Authority

AECOM

TITLE OF PROJECT: SUPERSTRUCTURE REPLACEMENT GSP CONNECTOR OVER NYS THRUWAY

LOCATION OF PROJECT: BIN 5514049 (MP 23.53)

TITLE OF DRAWING: TYPICAL APPROACH SECTIONS

CONTRACT NUMBER: TANY 26-23B

DATE: JULY 2026

DRAWING NUMBER: ST-03

AICE CHECKED BY: IW / MR / VZ DRAFTED BY: AICE CHECKED BY: IW / MR / VZ DESIGNED BY: RWL DESIGN SUPERVISOR:

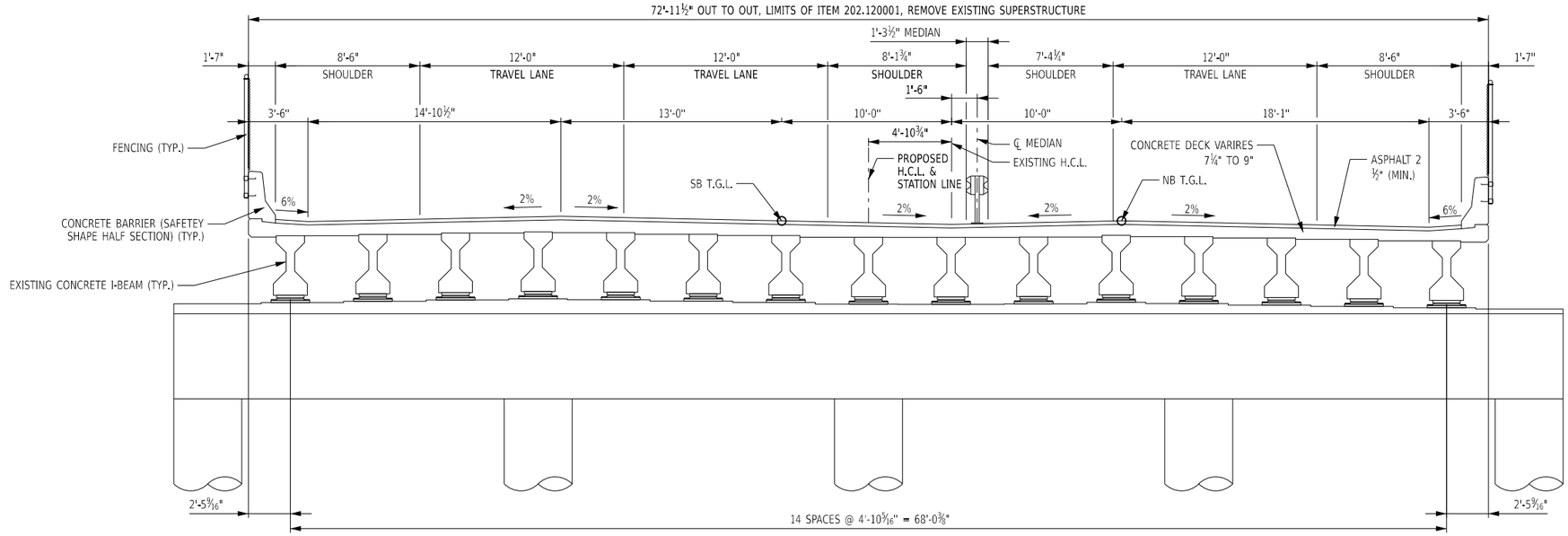

EXISTING TYPICAL SECTION

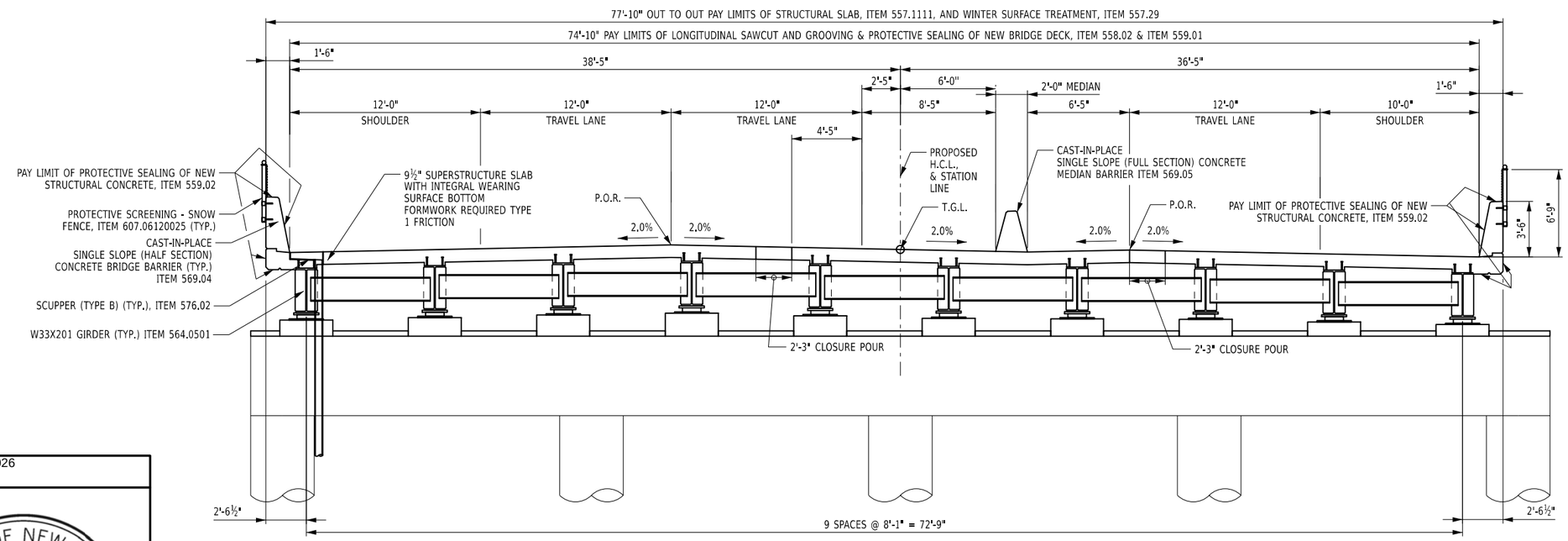

4 0 4 8 12 16'

1/8" = 1'

PROPOSED TYPICAL SECTION

ALTERED ON:	AFFIXED ON: 08/10/2026
SIGNATURE: STAMP:	SIGNATURE: STAMP: STATE OF NEW YORK · EDWIN TWISS · LICENSED PROFESSIONAL ENGINEER · 080650

IT IS A VIOLATION OF LAW FOR ANY PERSON, UNLESS THEY ARE ACTING UNDER THE DIRECTION OF A LICENSED PROFESSIONAL ENGINEER, ARCHITECT, LANDSCAPE ARCHITECT, OR LAND SURVEYOR, TO ALTER AN ITEM IN ANY WAY. IF AN ITEM BEARING THE STAMP OF A LICENSED PROFESSIONAL IS ALTERED, THE ALTERING ENGINEER, ARCHITECT, LANDSCAPE ARCHITECT, OR LAND SURVEYOR SHALL STAMP THE DOCUMENT AND INCLUDE THE NOTATION "ALTERED BY" FOLLOWED BY THEIR SIGNATURE, THE DATE OF SUCH ALTERATION, AND A SPECIFIC DESCRIPTION OF THE ALTERATION.

REVISIONS

DATE	DESCRIPTION	BY	SYM.

NEW YORK STATE | Thruway Authority

AECOM

TITLE OF PROJECT: SUPERSTRUCTURE REPLACEMENT GSP CONNECTOR OVER NYS THRUWAY

LOCATION OF PROJECT: BIN 5514049 (MP 23.53)

TITLE OF DRAWING: TYPICAL BRIDGE SECTIONS

CONTRACT NUMBER: TANY 26-23B

DATE: JULY 2026

DRAWING NUMBER: ST-04

DESIGN SUPERVISOR: RWL | DESIGNED BY: IW / MR / VZ | DRAFTED BY: AICE | CHECKED BY: IW / MR / VZ | CHECKED BY: AICE

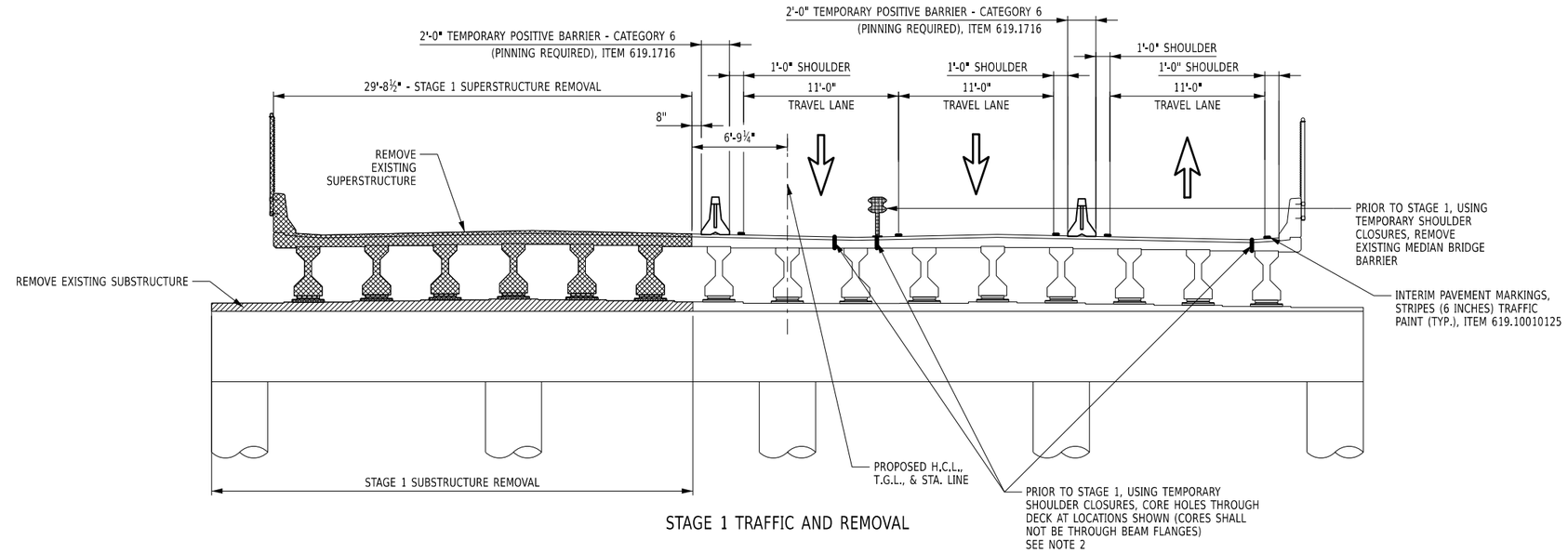

STAGE 1 TRAFFIC AND REMOVAL

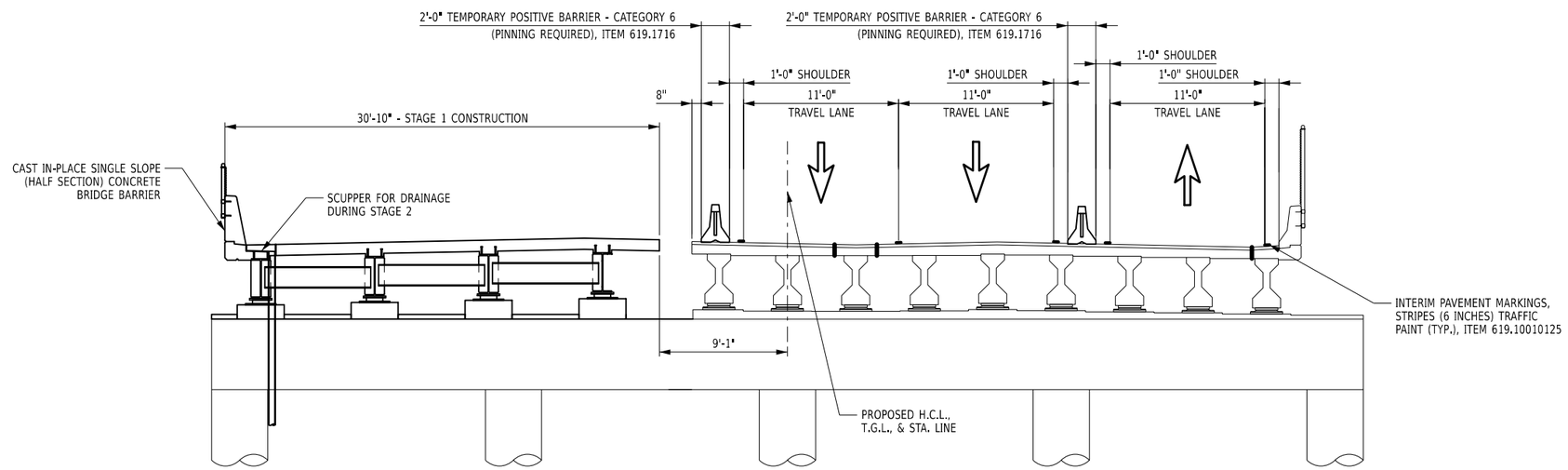

STAGE 1 TRAFFIC AND CONSTRUCTION

LEGEND

- REMOVAL OF SUPERSTRUCTURE, ITEM 202.120001
- REMOVAL OF SUBSTRUCTURE, ITEM 580.01

NOTES:

1. REFER TO NYSDOT STANDARD SHEETS 619-001 FOR TEMPORARY POSITIVE BARRIER DETAILS.
2. DRAINAGE CORE HOLES SHALL NOT BE LOCATED OVER THE THRUWAY MAINLINE (I-87/I-287) TRAVEL LANES OR SHOULDERS.
3. ALL SCUPPER DOWNSPOUTS SHALL BE EXTENDED BELOW THE REPAIR AREA.

ALTERED ON:	AFFIXED ON: 08/10/2026
SIGNATURE: STAMP:	SIGNATURE: STAMP:

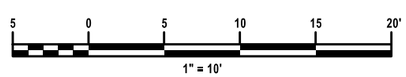

IT IS A VIOLATION OF LAW FOR ANY PERSON, UNLESS THEY ARE ACTING UNDER THE DIRECTION OF A LICENSED PROFESSIONAL ENGINEER, ARCHITECT, LANDSCAPE ARCHITECT, OR LAND SURVEYOR, TO ALTER AN ITEM IN ANY WAY. IF AN ITEM BEARING THE STAMP OF A LICENSED PROFESSIONAL IS ALTERED, THE ALTERING ENGINEER, ARCHITECT, LANDSCAPE ARCHITECT, OR LAND SURVEYOR SHALL STAMP THE DOCUMENT AND INCLUDE THE NOTATION "ALTERED BY" FOLLOWED BY THEIR SIGNATURE, THE DATE OF SUCH ALTERATION, AND A SPECIFIC DESCRIPTION OF THE ALTERATION.

REVISIONS

DATE	DESCRIPTION	BY	SYM.

NEW YORK STATE | Thruway Authority

AECOM

TITLE OF PROJECT
SUPERSTRUCTURE REPLACEMENT
GSP CONNECTOR OVER NYS THRUWAY

LOCATION OF PROJECT
BIN 5514049 (MP 23.53)

TITLE OF DRAWING
STAGING SECTIONS
(1 OF 3)

CONTRACT NUMBER: TANY 26-23B

DATE: JULY 2026

DRAWING NUMBER: ST-05

AICE | CHECKED BY: | IW / MR / VZ | DRAFTED BY: | AICE | CHECKED BY: | IW / MR / VZ | DESIGNED BY: | RWL | DESIGN SUPERVISOR:

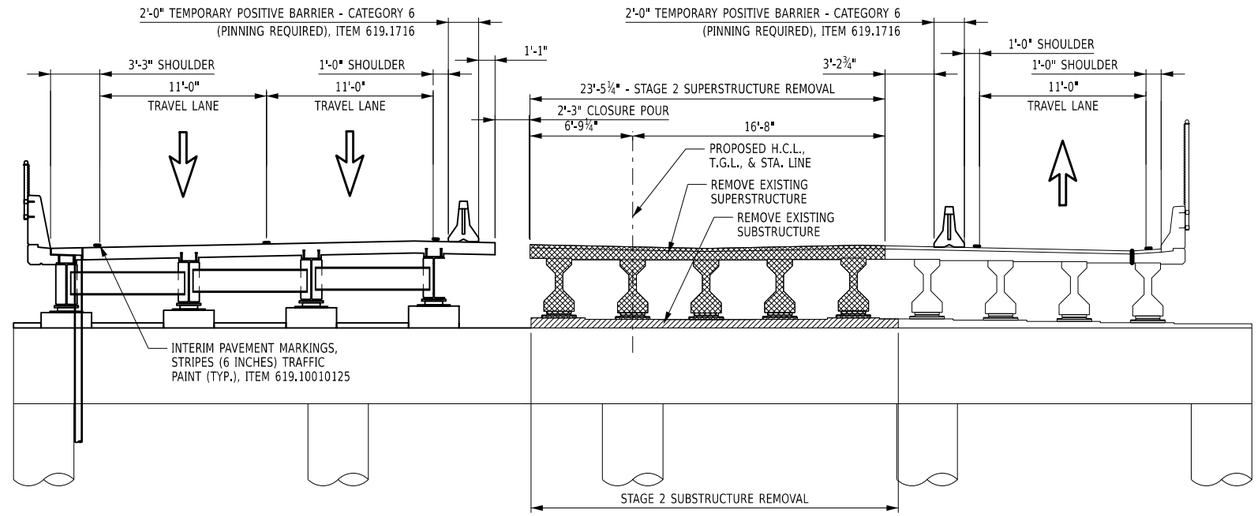

STAGE 2 TRAFFIC AND REMOVAL

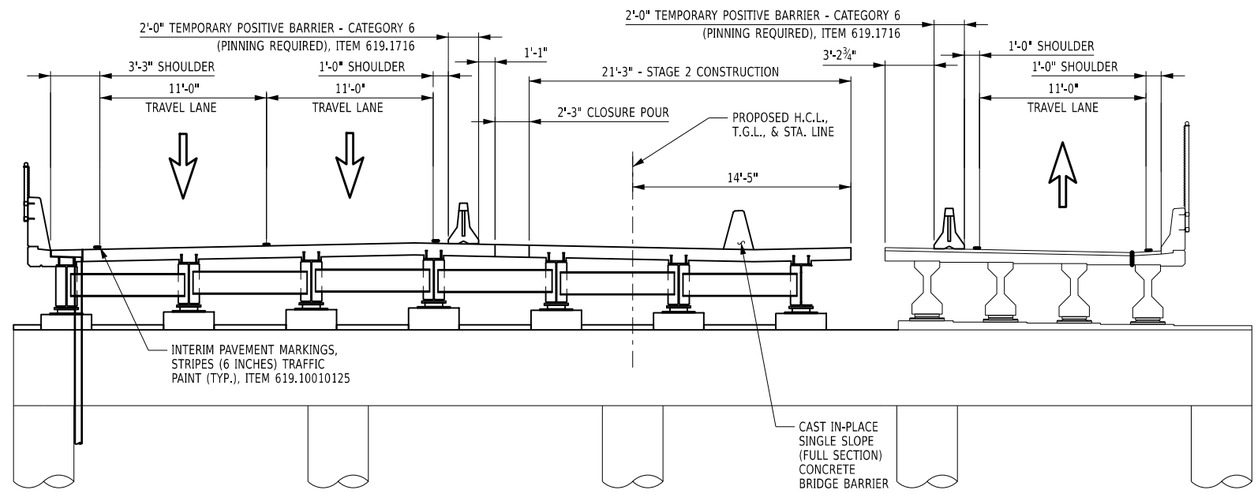

STAGE 2 TRAFFIC AND CONSTRUCTION

LEGEND

- REMOVAL OF SUPERSTRUCTURE, ITEM 202.120001
- REMOVAL OF SUBSTRUCTURE, ITEM 580.01

NOTES:

1. REFER TO NYSDOT STANDARD SHEETS 619-001 FOR TEMPORARY POSITIVE BARRIER DETAILS.

5 0 5 10 15 20'

1" = 10'

ALTERED ON:	AFFIXED ON: 08/10/2026
SIGNATURE: STAMP:	SIGNATURE: STAMP: STATE OF NEW YORK · EDWIN TWISS · EXCELSIOR · 080650 · LICENSED PROFESSIONAL ENGINEER

IT IS A VIOLATION OF LAW FOR ANY PERSON, UNLESS THEY ARE ACTING UNDER THE DIRECTION OF A LICENSED PROFESSIONAL ENGINEER, ARCHITECT, LANDSCAPE ARCHITECT, OR LAND SURVEYOR, TO ALTER AN ITEM IN ANY WAY. IF AN ITEM BEARING THE STAMP OF A LICENSED PROFESSIONAL IS ALTERED, THE ALTERING ENGINEER, ARCHITECT, LANDSCAPE ARCHITECT, OR LAND SURVEYOR SHALL STAMP THE DOCUMENT AND INCLUDE THE NOTATION "ALTERED BY" FOLLOWED BY THEIR SIGNATURE, THE DATE OF SUCH ALTERATION, AND A SPECIFIC DESCRIPTION OF THE ALTERATION.

REVISIONS

DATE	DESCRIPTION	BY	SYM.

NEW YORK STATE | Thruway Authority

AECOM

TITLE OF PROJECT
SUPERSTRUCTURE REPLACEMENT
GSP CONNECTOR OVER NYS THRUWAY

LOCATION OF PROJECT
BIN 5514049 (MP 23.53)

TITLE OF DRAWING
STAGING SECTIONS
(2 OF 3)

CONTRACT NUMBER: TANY 26-23B

DATE: JULY 2026

DRAWING NUMBER: ST-06

DESIGN SUPERVISOR: RWL | DRAFTED BY: AICE | DESIGNED BY: IW / MR / VZ | CHECKED BY: AICE | CHECKED BY: IW / MR / VZ | CHECKED BY: AICE

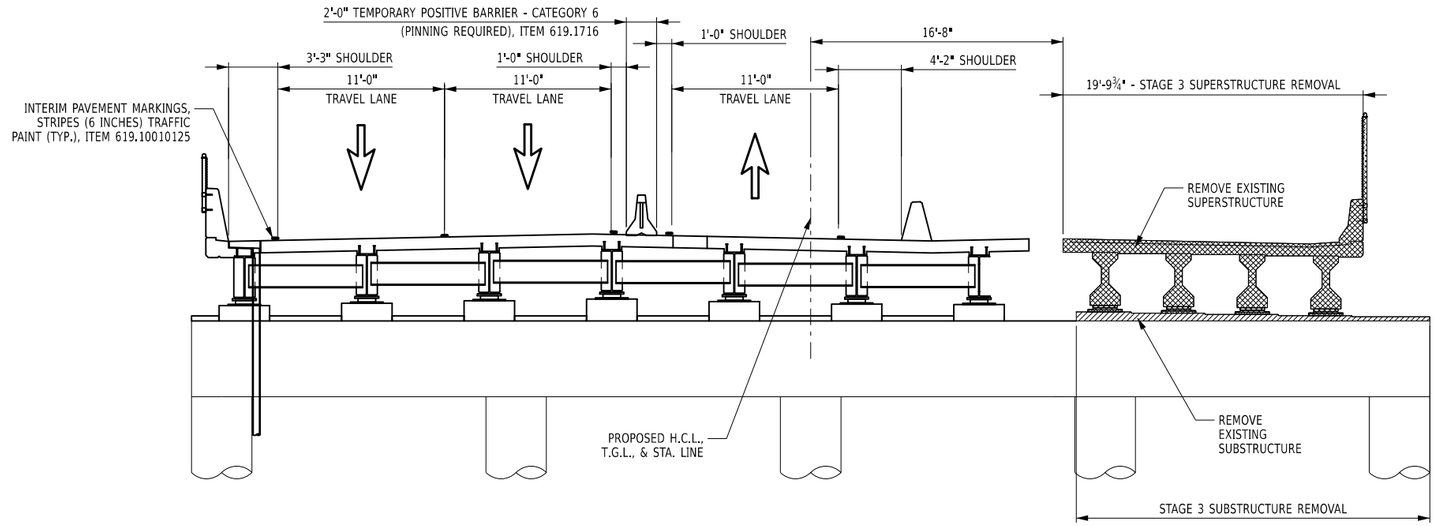

STAGE 3 TRAFFIC AND REMOVAL

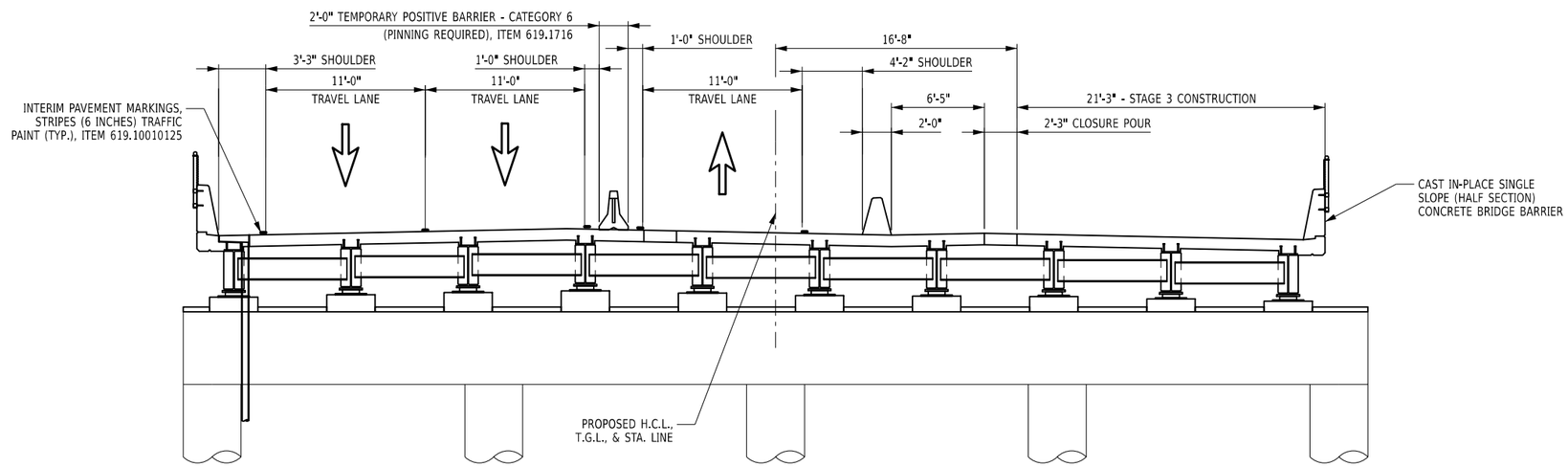

STAGE 3 TRAFFIC AND CONSTRUCTION

LEGEND

- REMOVAL OF SUPERSTRUCTURE, ITEM 202.120001
- REMOVAL OF SUBSTRUCTURE, ITEM 580.01

NOTES:

1. REFER TO NYSDOT STANDARD SHEETS 619-001 FOR TEMPORARY POSITIVE BARRIER DETAILS.

5 0 5 10 15 20'

1" = 10'

ALTERED ON:	AFFIXED ON: 08/10/2026
SIGNATURE: STAMP:	SIGNATURE: STAMP: STATE OF NEW YORK · EDWIN TWISS · 080650 · LICENSED PROFESSIONAL ENGINEER

IT IS A VIOLATION OF LAW FOR ANY PERSON, UNLESS THEY ARE ACTING UNDER THE DIRECTION OF A LICENSED PROFESSIONAL ENGINEER, ARCHITECT, LANDSCAPE ARCHITECT, OR LAND SURVEYOR, TO ALTER AN ITEM IN ANY WAY. IF AN ITEM BEARING THE STAMP OF A LICENSED PROFESSIONAL IS ALTERED, THE ALTERING ENGINEER, ARCHITECT, LANDSCAPE ARCHITECT, OR LAND SURVEYOR SHALL STAMP THE DOCUMENT AND INCLUDE THE NOTATION "ALTERED BY" FOLLOWED BY THEIR SIGNATURE, THE DATE OF SUCH ALTERATION, AND A SPECIFIC DESCRIPTION OF THE ALTERATION.

REVISIONS

DATE	DESCRIPTION	BY	SYM.

NEW YORK STATE | Thruway Authority

AECOM

TITLE OF PROJECT: SUPERSTRUCTURE REPLACEMENT GSP CONNECTOR OVER NYS THRUWAY

LOCATION OF PROJECT: BIN 5514049 (MP 23.53)

TITLE OF DRAWING: STAGING SECTIONS (3 OF 3)

CONTRACT NUMBER: TANY 26-23B

DATE: JULY 2026

DRAWING NUMBER: ST-07

DESIGN SUPERVISOR: RWL | DESIGNED BY: IW / MR / VZ | CHECKED BY: | DRAFTED BY: IW / MR / VZ | CHECKED BY: | AICE

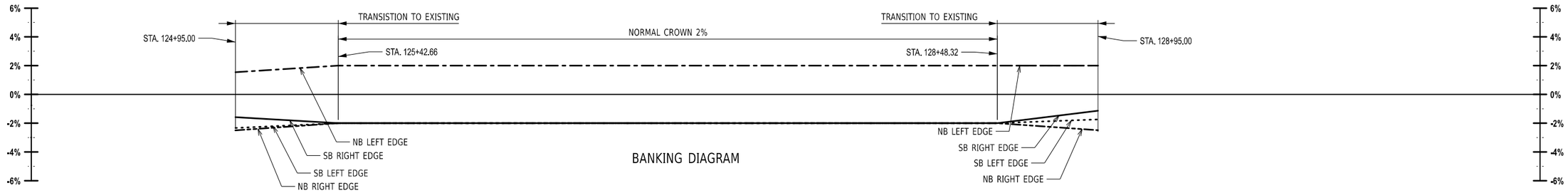

BANKING DIAGRAM

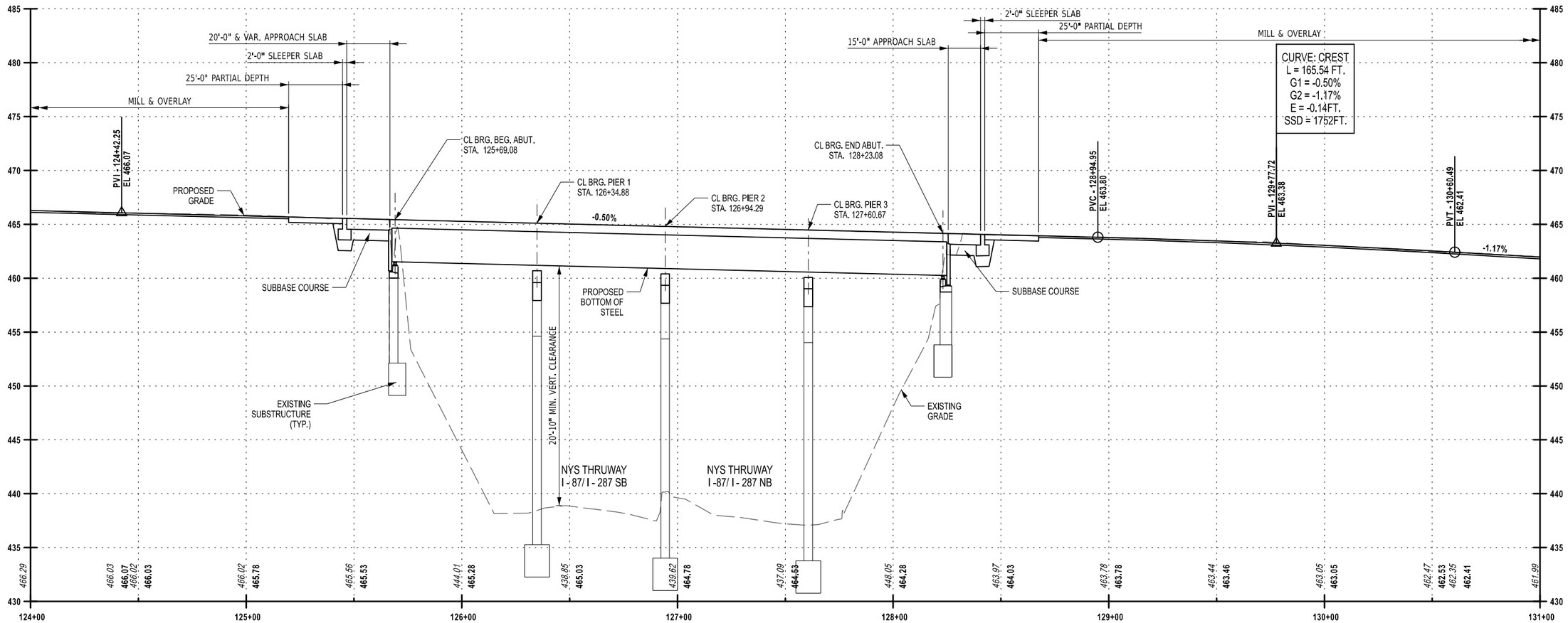

PROFILE

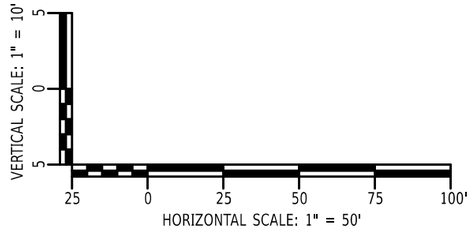

ALTERED ON:	AFFIXED ON: 08/10/2026
SIGNATURE: STAMP:	SIGNATURE: STAMP:

STATE OF NEW YORK · EDWIN TWISS · EXCELSIOR · 080650 · LICENSED PROFESSIONAL ENGINEER

IT IS A VIOLATION OF LAW FOR ANY PERSON, UNLESS THEY ARE ACTING UNDER THE DIRECTION OF A LICENSED PROFESSIONAL ENGINEER, ARCHITECT, LANDSCAPE ARCHITECT, OR LAND SURVEYOR, TO ALTER AN ITEM IN ANY WAY. IF AN ITEM BEARING THE STAMP OF A LICENSED PROFESSIONAL IS ALTERED, THE ALTERING ENGINEER, ARCHITECT, LANDSCAPE ARCHITECT, OR LAND SURVEYOR SHALL STAMP THE DOCUMENT AND INCLUDE THE NOTATION "ALTERED BY" FOLLOWED BY THEIR SIGNATURE, THE DATE OF SUCH ALTERATION, AND A SPECIFIC DESCRIPTION OF THE ALTERATION.

REVISIONS

DATE	DESCRIPTION	BY	SYM.

NEW YORK STATE | Thruway Authority

AECOM

TITLE OF PROJECT
SUPERSTRUCTURE REPLACEMENT
GSP CONNECTOR OVER NYS THRUWAY

LOCATION OF PROJECT
BIN 5514049 (MP 23.53)

TITLE OF DRAWING
BRIDGE PROFILE

CONTRACT NUMBER: TANY 26-23B

DATE: JULY 2026

DRAWING NUMBER: ST-08

DESIGN SUPERVISOR: RWL | DESIGNED BY: IW / MR / VZ | DRAFTED BY: AICE | CHECKED BY: IW / MR / VZ | CHECKED BY: AICE

GENERAL NOTES

1. DESIGN SPECIFICATIONS: NYSDOT LRFD BRIDGE DESIGN SPECIFICATIONS WITH ALL PROVISIONS IN EFFECT AS OF THE DATE SHOWN ON THE FRONT COVER OF THE PROPOSAL (FOR DESIGN PURPOSES, COMPRESSIVE STRENGTH OF CONCRETE FOR SUBSTRUCTURES AND DECK SLABS AT 28 DAYS: f'c = 4,000 psi.)
2. CONSTRUCTION SPECIFICATIONS: NYSDOT STANDARD SPECIFICATIONS - CONSTRUCTION AND MATERIALS WITH ALL PROVISIONS IN EFFECT AS OF THE DATE SHOWN ON THE FRONT COVER OF THE PROPOSAL.
3. THIS BRIDGE SHALL BE MAINTAINED IN ACCORDANCE WITH THE GUIDELINES CONTAINED IN THE CURRENT VERSION OF THE AASHTO MAINTENANCE MANUAL FOR ROADWAYS AND BRIDGES.
4. THE LOAD RATINGS ARE IN ACCORDANCE WITH THE AASHTO MANUAL FOR BRIDGE EVALUATION.
5. DESIGN LIVE LOAD: AASHTO HL-93.
6. DETAILS ON THE DRAWINGS LABELED AS "NOT TO SCALE" ARE INTENTIONALLY DRAWN NOT TO SCALE FOR VISUAL CLARITY. ALL OTHER DETAILS FOR WHICH NO SCALE IS SHOWN ARE DRAWN PROPORTIONALLY AND ARE FULLY DIMENSIONED.
7. ALL SHOP DRAWINGS FOR THIS PROJECT SHALL BE PREPARED IN THE U.S. CUSTOMARY UNITS.
8. RECORD PLANS COVERING PREVIOUS WORK WILL BE AVAILABLE FOR REVIEW FOR ALL PROSPECTIVE BIDDERS ON THE AUTHORITY'S WEBSITE PRIOR TO THE LETTING DATE.
9. MATERIALS CONTAINING ASBESTOS ARE BELIEVED TO EXIST AT VARIOUS LOCATIONS ON OR IN THE STRUCTURE(S) CONTAINED IN THIS CONTRACT. THESE MATERIALS WERE NOTED ON THE ORIGINAL CONTRACT PLANS OF THE STRUCTURE(S) AND/OR ENCOUNTERED DURING FIELD INSPECTIONS. ALL KNOWN ASBESTOS CONTAINING MATERIALS HAVE BEEN INDICATED IN THE CONTRACT DOCUMENTS. REMOVAL SHALL BE PAID UNDER ITEM 210.3411, REMOVAL AND DISPOSAL OF MISCELLANEOUS ACM.

SAMPLE IDENTIFICATION	MATERIAL	LOCATION	APPROX. QUANTITY
19 - 21	GREY CAULK	B/W CONCRETE BRIDGE JOINTS	200 LF

FOUNDATION NOTES

1. EMBANKMENT IN PLACE, ITEM 203.03 AND SELECT STRUCTURE FILL, ITEM 203.21, SHALL BE PLACED SIMULTANEOUSLY, ON BOTH SIDES OF THE VERTICAL PAYMENT LINE.
2. THE COST OF WATER USED FOR COMPACTION OF THE SELECT STRUCTURAL FILL SHALL BE INCLUDED IN THE UNIT PRICE BID FOR ITEM 203.21 – SELECT STRUCTURE FILL.
3. THE COST OF WATER USED FOR COMPACTION OF EMBANKMENT IN PLACE MATERIAL SHALL BE INCLUDED IN THE UNIT PRICE BID FOR ITEM 203.03 – EMBANKMENT IN PLACE.
4. ALL EXPOSED EDGES OF ABUTMENTS, WINGWALLS, AND PIERS, SHALL HAVE A MINIMUM CHAMFER OF 1", EXCEPT WHERE OTHERWISE NOTED.

SUBSTRUCTURE NOTES

1. THE CONTRACTOR, WITH THE APPROVAL OF THE NYSTA, MAY ELECT TO INTRODUCE CONSTRUCTION JOINTS IN THE ABUTMENTS AND/OR WINGWALLS AT LOCATIONS NOT SHOWN IN THE PLANS. CONSTRUCTION JOINTS SHALL BE PROVIDED WITH SHEAR KEYS AND WATERSTOPS. VERTICAL CONSTRUCTION JOINTS INTRODUCED IN THE ABUTMENTS AND/OR WINGWALLS SHOULD PREFERABLY BE PLACED MIDWAY BETWEEN THE PEDESTALS.
2. THE COST OF ALL JOINT MATERIAL AND WATERSTOPS AT CONCRETE CONSTRUCTION JOINTS,CONTRACTION AND EXPANSION JOINTS SHALL BE INCLUDED IN THE UNIT PRICE BID FOR THE VARIOUS CONCRETE ITEMS IN THE CONTRACT.

SUPERSTRUCTURE NOTES

1. ALL STRUCTURAL STEEL SHALL CONFORM TO ASTM A709, GRADE 50.
2. DIAPHRAGMS SHALL BE FABRICATED TO FIT GIRDERS ERECTED WITH THEIR WEBS PLUMB UNDER FULL DEAD LOAD CONDITIONS, ALSO KNOWN AS TOTAL DEAD LOAD FIT (TDLF).
3. ALL BOLTS SHALL BE ASTM F3125 GRADE 1, HOT DIPPED GALVANIZED.
4. SHOP DRAWINGS SHALL BE PREPARED IN ACCORDANCE WITH THE NEW YORK STATE STEEL CONSTRUCTION MANUAL AND SHALL BE SUBMITTED IN ACCORDANCE WITH THE NYSTA PROCEDURE AND PROCESSING CONTRACT SUBMITTALS (403-0-10).
5. FOR THE VARIOUS LUMP SUM STRUCTURAL STEEL ITEMS IN THE CONTRACT, THE "ESTIMATE OF TOTAL WEIGHT" IS AS FOLLOWS:

ITEM	ESTIMATE OF TOTAL WEIGHT	BIN
564.0501	592,110 POUNDS	5514049

THE "ESTIMATE OF TOTAL WEIGHT" SHALL BE USED TO DOCUMENT THE ENGINEER'S ESTIMATED AMOUNT OF STRUCTURAL STEEL REQUIRED FOR THE CONTRACT. UNDER NO CIRCUMSTANCES SHALL THESE WEIGHTS BE USED FOR FINAL PAYMENT PURPOSES. THE CONTRACTOR IS ADVISED NOT TO USE THESE WEIGHTS AS A BIDDING TOOL. DISCREPANCIES BETWEEN THE TOTAL WEIGHTS SHIPPED AND THE "ESTIMATE OF TOTAL WEIGHTS SHALL NOT BE A BASIS FOR ADDITIONAL COMPENSATION.

6. IT SHALL BE THE CONTRACTOR'S RESPONSIBILITY TO VERIFY THE FOLLOWING DIMENSIONS IN THE FIELD PRIOR TO THE FABRICATION OF NEW SUPERSTRUCTURE COMPONENTS:

A. EXISTING SPAN LENGTHS

METALIZING NOTES:

1. ALL GIRDERS, INCLUDING STIFFENERS AND CONNECTION PLATES, SHALL BE METALIZED. METALIZING SHALL WRAP 1" OVER THE TOP FLANGE. THE METALIZING SHALL BE INCLUDED IN THE UNIT PRICE BID FOR ITEM 572.00020125 - METALIZING.
2. ALL PRIMARY AND SECONDARY MEMBERS (DIAPHRAGMS, LATERAL BRACING, SHIMS, ETC.) SHALL BE METALIZED. THE COST OF METALIZING SHALL BE INCLUDED IN THE UNIT PRICE BID FOR ITEM 572.00020125 - METALIZING. THE CONTRACTOR HAS THE OPTION OF HOT-DIP GALVANIZING THE SECONDARY MEMBERS. IF THE CONTRACTOR ELECTS TO HOT-DIP GALVANIZE THESE MEMBERS, HOT-DIP GALVANIZING SHALL MEET THE REQUIREMENTS OF SECTION 719-01 TYPE I OF THE NYSDOT STANDARD SPECIFICATIONS – CONSTRUCTION AND MATERIALS. THE COST OF THE HOT-DIP GALVANIZING SHALL BE INCLUDED IN THE UNIT PRICE BID FOR ITEM 572.00020125 - METALIZING.
3. ALL EXPOSED STEEL COMPONENTS OF BRIDGE BEARINGS, INCLUDING THE SOLE PLATE AND THE MASONRY PLATE, SHALL BE METALIZED. THE COST OF METALIZING SHALL BE INCLUDED IN THE UNIT PRICE BID FOR ITEM 572.00020125 - METALIZING.
4. ALL BOLTS, NUTS, AND WASHERS SHALL BE GALVANIZED IN ACCORDANCE WITH THE NEW YORK STATE STEEL CONSTRUCTION MANUAL.
5. DRILLED HOLES SHALL BE CLEANED OF ALL EXCESS MATERIAL THAT PREVENTS THE PROPER INSTALLATION OF THE BOLTS.

STEEL ERECTION NOTES:

1. THE CONTRACTOR SHALL PROVIDE FOR THE STABILITY OF STRUCTURAL STEEL DURING ALL PHASES OF ERECTION AND CONSTRUCTION, AS PROVIDED IN SECTION 2, SUBSECTION 204 OF THE NEW YORK STATE STEEL CONSTRUCTION MANUAL (SCM). THE MEANS AND METHODS USED BY THE CONTRACTOR SHALL BE DOCUMENTED ON THE ERECTION DRAWINGS AND INCLUDED IN THE SUPPORTING STABILITY CALCULATIONS. THE ERECTION DRAWINGS AND STABILITY CALCULATIONS SHALL BE SEALED BY A REGISTERED NEW YORK STATE PROFESSIONAL ENGINEER AND SUBMITTED TO THE NYSTA IN ACCORDANCE WITH THE SCM.
2. THE DESIGN OF THIS STRUCTURE ASSUMES THAT THE STRUCTURAL STEEL IS COMPLETELY ERECTED BEFORE IT IS ALLOWED TO DEFLECT UNDER ITS OWN DEAD LOAD. DEFLECTIONS INCURRED DURING THE VARIOUS STAGES OF THE ERECTION ARE NOT CONSIDERED. THEREFORE, THE ACTUAL ERECTION MEANS AND METHODS EMPLOYED BY THE CONTRACTOR MAY HAVE A SUBSTANTIAL EFFECT ON THE FINAL STEEL PROFILE. THE CONTRACTOR SHALL BE RESPONSIBLE FOR ENSURING THAT THE FINAL ALIGNMENT AND PROFILE OF THE ERECTED STEEL CONFORMS TO SECTION 12, SUBSECTIONS 1213, 1214, AND 1215 OF THE NEW YORK STATE STEEL CONSTRUCTION MANUAL (SCM). ANY CORRECTIVE WORK NECESSARY TO RE-POSITION PREVIOUSLY ERECTED STEEL TO ACHIEVE ACCEPTABLE ALIGNMENT AND PROFILE MUST BE APPROVED BY THE ENGINEER. ANY CORRECTIVE WORK NECESSARY SHALL BE PERFORMED AT NO ADDITIONAL COST TO THE AUTHORITY.

STEEL CONSTRUCTION NOTES

1. DIMENSIONS FOR THICKNESSES OF STEEL ROLLED ANGLE SHAPES AND STRUCTURAL TUBING ARE SHOWN ACCORDING TO THE AISC MANUAL.

MISCELLANEOUS NOTES

1. UNLESS INDICATED OTHERWISE, ALL CONCRETE REINFORCEMENT USED SHALL BE GALVANIZED. COST OF GALVANIZED BAR REINFORCEMENT IN SUBSTRUCTURES SHALL BE PAID FOR UNDER ITEM 556.0203.

SUPERSTRUCTUE SLAB NOTES

1. DECK FORMS SHALL BE STAY-IN-PLACE (SIP) FORMS BETWEEN ALL GIRDERS AND SHALL BE REMOVABLE FORMS FOR BOTH FASCIA OVERHANGS. SIP FORMS SHALL CONFORM TO ASTM A653. COATING DESIGNATION G235. FABRICATION SHALL BE IN CONFORMANCE WITH ASTM A924.
2. THE PROVISIONS OF THE CURRENT SPECIFICATIONS FOR SUPERSTRUCTURE SLABS ALLOW THE OPTION OF 3 FORMING SYSTEMS FOR THE SLABS.
3. ON THIS BRIDGE, ONLY THE FOLLOWING OPTION(S) WILL BE PERMITTED:
   - PERMANENT CORRUGATED METAL FORMS.
4. THE SURFACES OF THE GIRDERS SHALL BE PROTECTED FROM SUPPORTS TO PREVENT DAMAGE TO THE METALIZED SURFACES.
5. ALL LONGITUDINAL AND TRANSVERSE TOP MAT DECK REINFORCING SHALL BE STAGGERED ½ THE SPACING ABOVE THE BOTTOM MAT DECK REINFORCING STEEL UNLESS OTHERWISE INDICATED IN THE PLANS.
6. THE CONTRACTOR SHALL MAKE NO DEVIATIONS FROM THE HAUNCH DETAILS SHOWN IN THE PLANS WITHOUT THE PERMISSION OF THE ENGINEER.
7. THE DETAILS FOR THE BARRIER REINFORCEMENT ARE FOR THE SLIP-FORMED OR CAST-IN-PLACE OPTION ONLY. COST OF BARRIER AND ANCHORAGE REINFORCEMENT ORIGINATING IN THE DECK SHALL BE INCLUDED IN THE UNIT PRICE BID FOR THE BARRIER ITEM.
8. TOP SURFACES OF NEW BRIDGE DECKS AND APPROACH SLABS SHALL BE SEALED IN ACCORDANCE WITH ITEM 559.01 – PROTECTIVE SEALING OF STRUCTURAL CONCRETE ON NEW BRIDGE DECKS AND BRIDGE DECK OVERLAYS.
9. EXPOSED SURFACES OF NEW CONCRETE PARAPETS OR BARRIERS SHALL BE SEALED IN ACCORDANCE WITH ITEM 559.02 – PROTECTIVE SEALING OF NEW STRUCTURAL CONCRETE. ONLY PENETRATING TYPE SEALERS SHALL BE USED.

STAGE CONSTRUCTION NOTES

1. THE STRUCTURAL SLAB AND SLAB OVERHANG FOR EACH STAGE OF CONSTRUCTION HAVE BEEN DESIGNED FOR THE LOADING CONDITIONS SHOWN IN THE DETAILS.
2. THE COST OF FURNISHING AND PLACING MECHANICAL CONNECTORS SECTION 709-10 MECHANICAL CONNECTORS FOR REINFORCING BAR SPLICES SHALL BE INCLUDED IN THE UNIT PRICES BID FOR THE SUPERSTRUCTURE SLAB ITEM.
3. THE INTERMEDIATE DIAPHRAGMS AND END DIAPHRAGMS SHALL BE INSTALLED AND BOLTS TIGHTENED PRIOR TO PROCEEDING WITH THE CLOSURE PLACEMENT.
4. THE CONTRACTOR SHALL WAIT A MINIMUM OF 72 HOURS FOLLOWING COMPLETION OF THE SECOND STAGE DECK PLACEMENT BEFORE BEGINNING THE CLOSURE PLACEMENT.
5. THE CONTRACTOR SHALL SUPPORT FORM WORK FOR THE STAGE 2 AND STAGE 3 DECK PLACEMENT ONLY BY THE STAGE 2 AND STAGE 3 STRINGERS RESPECTIVELY, NOT BY THE STAGE STRINGER IMMEDIATELY ADJACENT.
6. PRIOR TO PLACING THE STAGE 2 AND STAGE 3 DECK PLACEMENT AND FOR 72 HOURS FOLLOWING ITS COMPLETION, NO REINFORCING BAR WITHIN THE CLOSURE PLACEMENT SHALL BE WIRED.
7. THE TEMPORARY FASCIAS OF THE STAGE 1, STAGE 2, AND STAGE 3 DECK SHALL BE THOROUGHLY WET FOR 12 HOURS IMMEDIATELY PRIOR TO PROCEEDING WITH THE CLOSURE PLACEMENT. THE CONTRACTOR SHALL REMOVE ALL STANDING WATER WITH OIL-FREE COMPRESSED AIR AND SHALL PROTECT THE FASCIA SURFACES FROM DRYING, SO THE EXISTING CONCRETE REMAINS IN A CLEAN, SATURATED SURFACE DRY CONDITION UNTIL PLACEMENT OF THE NEW CONCRETE.

REMOVAL NOTES

1. EXISTING SUBSTRUCTURES SHALL BE PARTIALLY REMOVED WITHIN THE PAY LIMITS SHOWN IN THE PLANS UNDER ITEM 580.01 - REMOVAL OF STRUCTURAL CONCRETE.
2. SUPERSTRUCTURE REMOVAL SHALL MEET THE PROVISIONS OF SECTION 202-3.01 - GENERAL AND SAFETY REQUIREMENTS, OF THE NYSDOT STANDARD SPECIFICATIONS – CONSTRUCTION AND MATERIALS. A REMOVAL PLAN, SEALED BY A PROFESSIONAL ENGINEER, SHALL BE SUBMITTED TO THE ENGINEER THIRTY (30) DAYS PRIOR TO BEGINNING THE DEMOLITION.
3. DURING REMOVAL OPERATIONS, THE CONTRACTOR SHALL NOT DROP WASTE CONCRETE, DEBRIS OR OTHER MATERIAL TO RAILROAD RIGHT-OF-WAY, RIVERS, AND ROADWAYS BELOW THE BRIDGE EXCEPT WHERE THE PLANS OR SPECIFICATIONS SPECIFICALLY PERMIT THE DROPPING OF MATERIAL. PLATFORMS, NETS, OR OTHER PROTECTIVE DEVICES SHALL BE USED TO CATCH THE MATERIAL. IF THE ENGINEER DETERMINES THAT ADEQUATE PROTECTIVE DEVICES ARE NOT BEING EMPLOYED, THE WORK SHALL BE SUSPENDED UNTIL ADEQUATE PROTECTION IS PROVIDED. IF MATERIAL FALLS ON THE AREA BELOW AND ADJACENT TO THE BRIDGE, IT SHALL BE REMOVED AND DISPOSED OF BY THE CONTRACTOR ON A DAILY BASIS.
4. THE COST OF FURNISHING, INSTALLING, MAINTAINING, REMOVING AND DISPOSING OF ALL PLATFORMS, NETS, SCREENS AND OTHER PROTECTIVE DEVICES SHALL BE INCLUDED IN THE UNIT BID PRICES OF THE APPROPRIATE ITEMS IN THE CONTRACT.
5. IF THE STRUCTURE HAS A BRIDGE IDENTIFICATION NUMBER (B.I.N.) PLATE ATTACHED, REMOVE AND REMOUNT IT AFTER CONSTRUCTION IS COMPLETED. BRIDGE IDENTIFICATION SIGNS (GARDEN STATE PKWY) SHALL BE REMOVED.
6. LOOSE AND/OR PEELING PAINT ON STEEL SURFACES MAY BECOME DISLODGED DURING REMOVAL OPERATIONS OR DURING TRANSPORTATION FROM THE SITE UNLESS APPROPRIATE MEASURES ARE TAKEN. THE CONTRACTOR SHALL FORMULATE AND SUBMIT A METHOD OF REMEDIATING THE CONDITION FOR APPROVAL BY THE ENGINEER. WORKER LEAD PROTECTION IN ACCORDANCE WITH 29 CFR 1926.62 SHALL BE SATISFIED. REMEDIATION METHODS COULD INCLUDE TRANSPORTING AFFECTED MEMBERS IN CLOSED TRUCKS, WRAPPING AFFECTED MEMBERS PRIOR TO REMOVAL, ENCAPSULATING THE LOOSE PAINT OR REMOVAL OF LOOSE PAINT PRIOR TO DISMANTLING OPERATIONS. THE COST OF REMEDIATING THIS CONDITION SHALL BE INCLUDED IN THE LUMP SUM PRICE(S) BID FOR THE SUPERSTRUCTURE REMOVAL ITEM(S) (OR THE UNIT PRICE BID FOR THE SUBSTRUCTURE REMOVAL ITEM.) THE USE OF ENVIRONMENTAL GROUND AND/OR WATERWAY PROTECTION ITEMS WILL BE REQUIRED. DEPENDING ON THE ALTERNATIVE CHOSEN, THE TREATMENT AND DISPOSAL OF PAINT REMOVAL WASTE ITEM MAY BE REQUIRED. BECAUSE OF THE ABOVE-MENTIONED CONDITION, THE CONTRACTOR SHALL EXAMINE THE CONDITION OF THE STRUCTURE'S PAINT PRIOR TO SUBMITTING A BID.

RECONSTRUCTION NOTES

1. DUE TO THE NATURE OF RECONSTRUCTION PROJECTS, THE EXACT EXTENT OF RECONSTRUCTION WORK CANNOT BE ACCURATELY DETERMINED PRIOR TO THE COMMENCEMENT OF WORK. THE CONTRACT DOCUMENTS HAVE BEEN PREPARED BASED ON FIELD INSPECTION AND OTHER INFORMATION AVAILABLE AT THE TIME. ACTUAL FIELD CONDITIONS MAY REQUIRE MODIFICATIONS TO CONSTRUCTION DETAILS AND WORK QUANTITIES. THE CONTRACTOR SHALL PERFORM THE WORK IN ACCORDANCE WITH FIELD CONDITIONS.
2. THE CONTRACTOR SHALL PERFORM ALL WORK WITH CARE SO THAT ANY MATERIALS WHICH ARE TO REMAIN IN PLACE, OR WHICH ARE TO REMAIN THE PROPERTY OF THE STATE, WILL NOT BE DAMAGED. IF THE CONTRACTOR DAMAGES ANY MATERIALS WHICH ARE TO REMAIN IN PLACE OR WHICH ARE TO REMAIN THE PROPERTY OF THE STATE, THE DAMAGED MATERIALS SHALL BE REPAIRED OR REPLACED IN A MANNER SATISFACTORY TO THE ENGINEER AT THE EXPENSE OF THE CONTRACTOR.
3. WHEN ITEMS IN THE CONTRACT REQUIRE MATERIALS TO BE REMOVED AND DISPOSED OF, THE COST OF SUPPLYING A DISPOSAL AREA AND TRANSPORTATION TO THAT AREA SHALL BE INCLUDED IN THE UNIT PRICE BID FOR THOSE ITEMS.
4. THE DETAILS SHOWN IN THE CONTRACT PLANS INDICATE THE SPALLS, SCALES AND CRACKS NOTED FROM A FIELD INSPECTION BY THE DESIGNER. ALL MAJOR AREAS OF SPALLING, SCALING, AND CRACKING KNOWN TO EXIST AT THE TIME OF CONTRACT PREPARATION HAVE BEEN SHOWN TO INDICATE THE APPROXIMATE EXTENT OF DETERIORATION REQUIRING REPAIRS BY THE CONTRACTOR.
5. THE CONTRACTOR SHALL PROVIDE THE ENGINEER ACCESS TO ALL PIER SURFACES FOR SOUNDING. THE ENGINEER WILL DETERMINE AND MARK OUT FINAL REMOVAL LIMITS. THE ENGINEER WILL SUBMIT LABELED DIGITAL PHOTOS OF THE PIER TO THE REGIONAL STRUCTURES ENGINEER ALONG WITH THE CONTRACTOR'S PROPOSED REMOVAL AND REPLACEMENT SEQUENCE FOR APPROVAL. A MINIMUM OF 10 CALENDAR DAYS SHALL BE ALLOWED FOR REVIEW AND APPROVAL. REMOVAL OF CONCRETE SHALL NOT COMMENCE WITHOUT AN APPROVED REMOVAL PLAN. THE COST OF THIS WORK SHALL BE INCLUDED IN THE REMOVAL AND REPLACEMENT CONCRETE ITEMS.
6. AREAS OF CONCRETE DETERIORATION SHALL BE REPAIRED USING ITEM 582.0052 - REMOVAL AND REPLACEMENT AS SHOWN IN THE PLANS OR AS ORDERED BY THE ENGINEER.
7. ALL CONCRETE SURFACES RECEIVING NEW CONCRETE SHALL BE SANDBLASTED. PRIOR TO THE APPLICATION OF NEW CONCRETE, THE SURFACES SHALL BE AIR CLEANED THEN PRE-WET FOR 12 HOURS. THERE WILL BE NO SEPARATE PAYMENT FOR THIS WORK. THE COST SHALL BE INCLUDED IN THE UNIT PRICE BID FOR THE VARIOUS CONCRETE REPAIR ITEMS IN THE CONTRACT.
8. IT SHALL BE THE CONTRACTOR'S RESPONSIBILITY TO VERIFY THE TOP OF PEDESTAL ELEVATIONS PRIOR TO CASTING NEW PEDESTALS AND INSTALLING THE NEW BEARINGS.

DESIGN SUPERVISOR: RWL | DRAFTED BY: AICE | DESIGNED BY: IW / MR / VZ | CHECKED BY: IW / MR / VZ | CHECKED BY: AICE

ALTERED ON:

AFFIXED ON: 08/10/2026

SIGNATURE:
STAMP:

SIGNATURE:
STAMP:

STATE OF NEW YORK
EDWIN TWISS
EXCELSIOR
080650
LICENSED PROFESSIONAL ENGINEER

IT IS A VIOLATION OF LAW FOR ANY PERSON, UNLESS THEY ARE ACTING UNDER THE DIRECTION OF A LICENSED PROFESSIONAL ENGINEER, ARCHITECT, LANDSCAPE ARCHITECT, OR LAND SURVEYOR, TO ALTER AN ITEM IN ANY WAY. IF AN ITEM BEARING THE STAMP OF A LICENSED PROFESSIONAL IS ALTERED, THE ALTERING ENGINEER, ARCHITECT, LANDSCAPE ARCHITECT, OR LAND SURVEYOR SHALL STAMP THE DOCUMENT AND INCLUDE THE NOTATION "ALTERED BY" FOLLOWED BY THEIR SIGNATURE, THE DATE OF SUCH ALTERATION, AND A SPECIFIC DESCRIPTION OF THE ALTERATION.

REVISIONS

DATE	DESCRIPTION	BY	SYM.

NEW YORK STATE | Thruway Authority

AECOM

TITLE OF PROJECT: SUPERSTRUCTURE REPLACEMENT GSP CONNECTOR OVER NYS THRUWAY

LOCATION OF PROJECT: BIN 5514049 (MP 23.53)

TITLE OF DRAWING: GENERAL NOTES

CONTRACT NUMBER: TANY 26-23B

DATE: JULY 2026

DRAWING NUMBER: ST-09

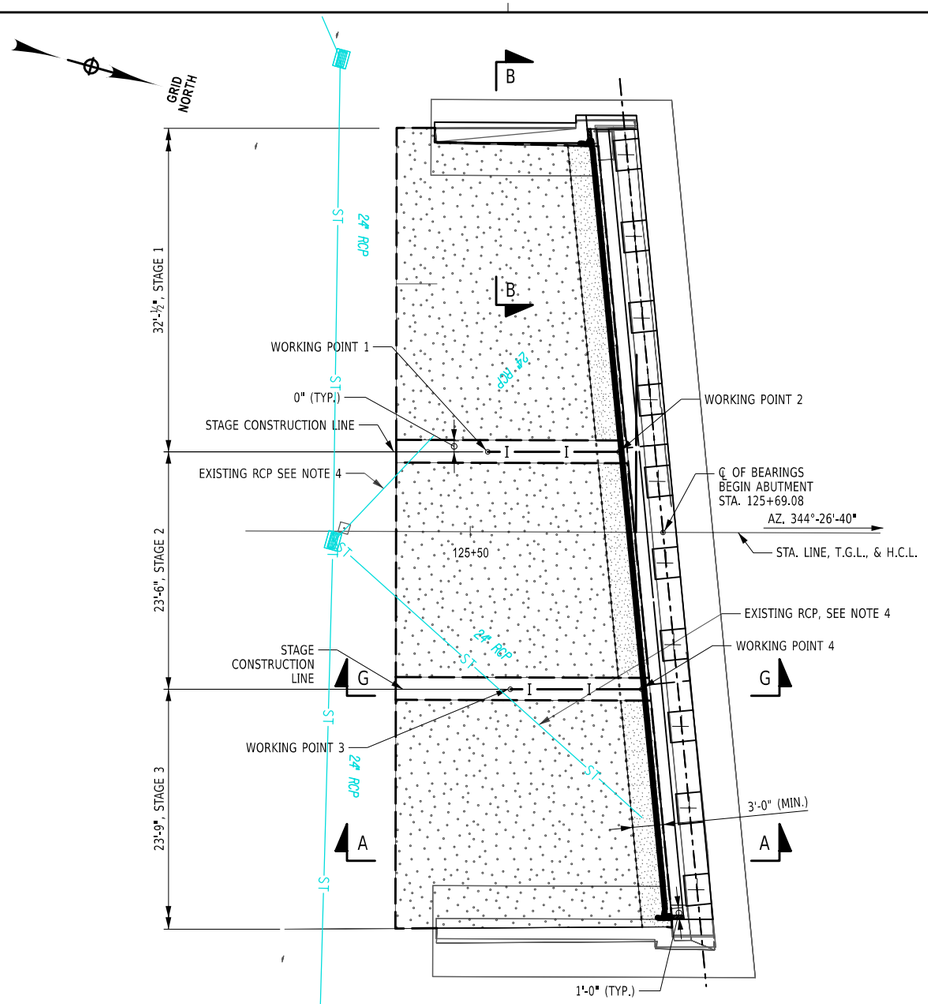

BEGIN ABUTMENT PLAN VIEW

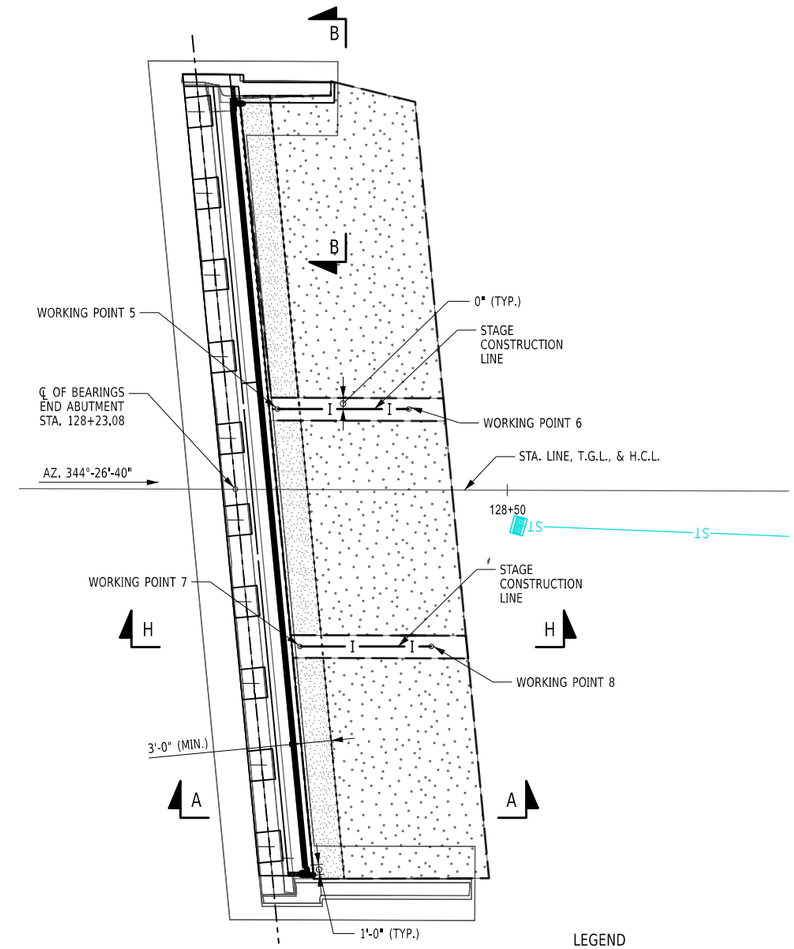

END ABUTMENT PLAN VIEW

LEGEND

- SELECT STRUCTURE FILL, ITEM 203.21
- HIGHWAY EMBANKMENT MATERIAL
- PREFABRICATED COMPOSITE INTEGRAL ABUTMENT DRAIN, ITEM 207.27
- AREA ENCLOSED WITHIN THESE LINES DESIGNATES PAYMENT LINES FOR STRUCTURE EXCAVATION, ITEM 206.01
- EXISTING GROUND SURFACE
- INTERIM STEEL SHEETING ITEM 552.15
- SUBBASE COURSE, ITEM 304.12

INTERIM STEEL SHEETING 552.15

LOCATION	STATION	OFFSET
WORKING POINT 1	125+51.73	8.0 LT
WORKING POINT 2	125+64.73	8.0 LT
WORKING POINT 3	125+53.96	15.5 RT
WORKING POINT 4	125+66.96	15.5 RT
WORKING POINT 5	128+27.25	8.0 LT
WORKING POINT 6	128+40.25	8.0 LT
WORKING POINT 7	128+29.48	15.5 RT
WORKING POINT 8	128+42.48	15.5 RT

NOTES:

1. SEE HIGHWAY DRAWINGS FOR FILL TYPES AND LIMITS BEYOND STRUCTURE EXCAVATION LIMITS.
2. FOR SECTION A-A AND SECTION B-B DETAILS, SEE DWG. NO. ST-11.
3. FOR SECTION G-G AND SECTION H-H DETAILS, SEE DWG. NO. ST-12.
4. AS-BUILTS INDICATE THAT THE EXISTING 24" RCP PIPES CONNECTED THE PREVIOUSLY REMOVED TRENCH DRAINAGE TO THE DRAINAGE STRUCTURE. RCP MAY BE REMOVED AS NECESSARY TO INSTALL INTERIM SHEETING. COST OF PIPE REMOVAL TO BE PAID FOR UNDER ITEM 203.02.

5 0 5 10 15 20'
1" = 15'

ALTERED ON:
AFFIXED ON: 08/10/2026
SIGNATURE:
STAMP:
SIGNATURE:
STAMP:

STATE OF NEW YORK · EDWIN TWISS · EXCELSIOR · 080650 · LICENSED PROFESSIONAL ENGINEER

IT IS A VIOLATION OF LAW FOR ANY PERSON, UNLESS THEY ARE ACTING UNDER THE DIRECTION OF A LICENSED PROFESSIONAL ENGINEER, ARCHITECT, LANDSCAPE ARCHITECT, OR LAND SURVEYOR, TO ALTER AN ITEM IN ANY WAY. IF AN ITEM BEARING THE STAMP OF A LICENSED PROFESSIONAL IS ALTERED, THE ALTERING ENGINEER, ARCHITECT, LANDSCAPE ARCHITECT, OR LAND SURVEYOR SHALL STAMP THE DOCUMENT AND INCLUDE THE NOTATION "ALTERED BY" FOLLOWED BY THEIR SIGNATURE, THE DATE OF SUCH ALTERATION, AND A SPECIFIC DESCRIPTION OF THE ALTERATION.

REVISIONS

DATE	DESCRIPTION	BY	SYM.

NEW YORK STATE | Thruway Authority

AECOM

TITLE OF PROJECT: SUPERSTRUCTURE REPLACEMENT GSP CONNECTOR OVER NYS THRUWAY
LOCATION OF PROJECT: BIN 5514049 (MP 23.53)
TITLE OF DRAWING: EXCAVATION AND EMBANKMENT PLAN

CONTRACT NUMBER: TANY 26-23B
DATE: JULY 2026
DRAWING NUMBER: ST-10

DESIGN SUPERVISOR: RWL
DESIGNED BY: IW / MR / VZ
DRAFTED BY: AICE
CHECKED BY: IW / MR / VZ
CHECKED BY: AICE

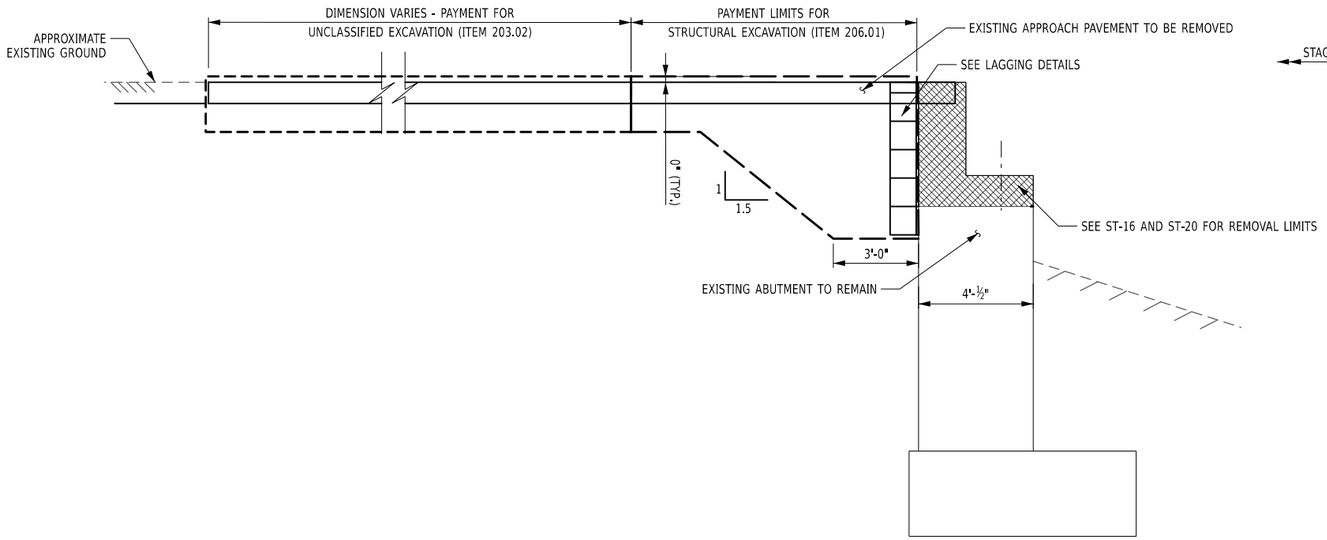

SECTION A-A (EXISTING)
(BEGIN ABUTMENT SHOWN, END ABUTMENT SIMILAR)

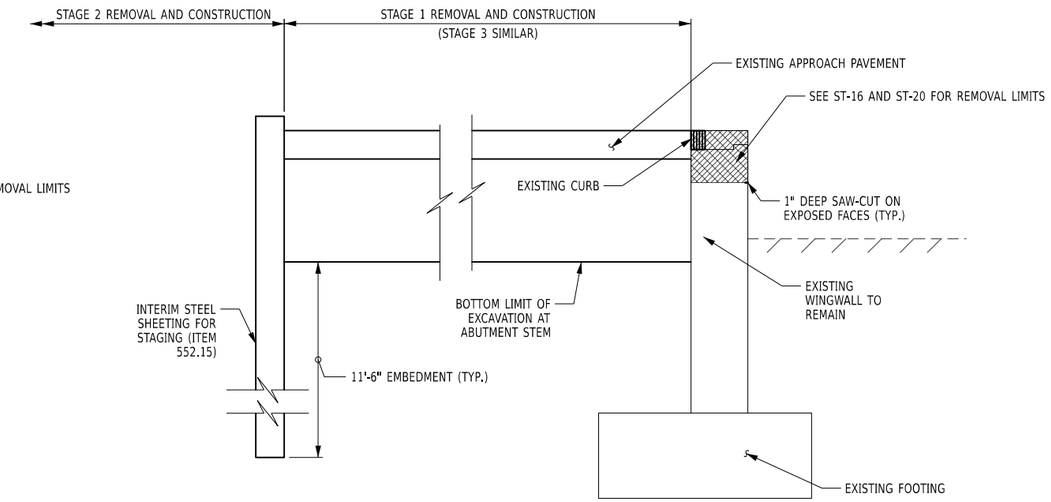

SECTION B-B (EXISTING)
(BAL SHOWN, OTHER WALL SIMILAR)

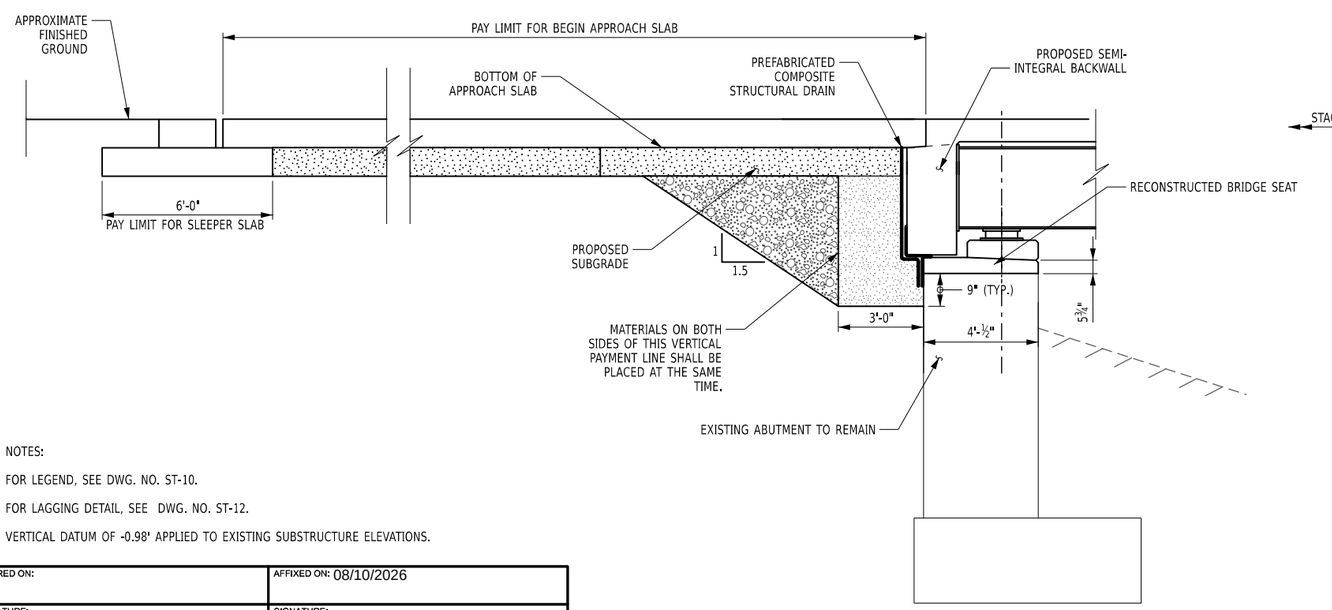

NOTES:

FOR LEGEND, SEE DWG. NO. ST-10.

FOR LAGGING DETAIL, SEE DWG. NO. ST-12.

VERTICAL DATUM OF -0.98' APPLIED TO EXISTING SUBSTRUCTURE ELEVATIONS.

SECTION A-A (PROPOSED)
(BEGIN ABUTMENT SHOWN, END ABUTMENT SIMILAR)

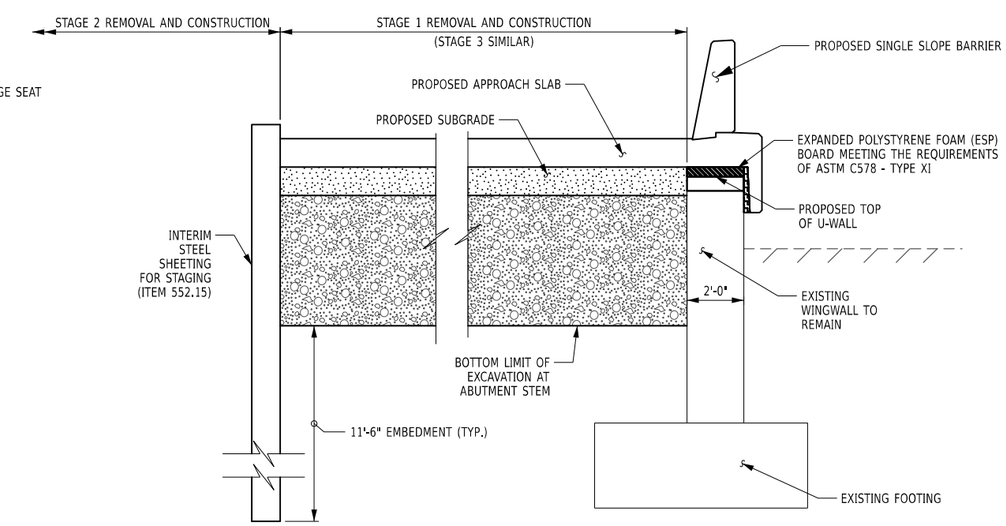

SECTION B-B (PROPOSED)
(BAL SHOWN, OTHER WALL SIMILAR)

ALTERED ON:	AFFIXED ON: 08/10/2026
SIGNATURE: STAMP:	SIGNATURE: STAMP: STATE OF NEW YORK · EDWIN TWISS · EXCELSIOR · 080650 · LICENSED PROFESSIONAL ENGINEER

IT IS A VIOLATION OF LAW FOR ANY PERSON, UNLESS THEY ARE ACTING UNDER THE DIRECTION OF A LICENSED PROFESSIONAL ENGINEER, ARCHITECT, LANDSCAPE ARCHITECT, OR LAND SURVEYOR, TO ALTER AN ITEM IN ANY WAY. IF AN ITEM BEARING THE STAMP OF A LICENSED PROFESSIONAL IS ALTERED, THE ALTERING ENGINEER, ARCHITECT, LANDSCAPE ARCHITECT, OR LAND SURVEYOR SHALL STAMP THE DOCUMENT AND INCLUDE THE NOTATION "ALTERED BY" FOLLOWED BY THEIR SIGNATURE, THE DATE OF SUCH ALTERATION, AND A SPECIFIC DESCRIPTION OF THE ALTERATION.

REVISIONS

DATE	DESCRIPTION	BY	SYM.

NEW YORK STATE | Thruway Authority

AECOM

TITLE OF PROJECT: SUPERSTRUCTURE REPLACEMENT GSP CONNECTOR OVER NYS THRUWAY

LOCATION OF PROJECT: BIN 5514049 (MP 23.53)

TITLE OF DRAWING: EXCAVATION AND EMBANKMENT SECTIONS (1 OF 2)

CONTRACT NUMBER: TANY 26-23B

DATE: JULY 2026

DRAWING NUMBER: ST-11

DESIGN SUPERVISOR: RWL | DESIGNED BY: IW / MR / VZ | DRAFTED BY: IW / MR / VZ | CHECKED BY: AICE | CHECKED BY: AICE

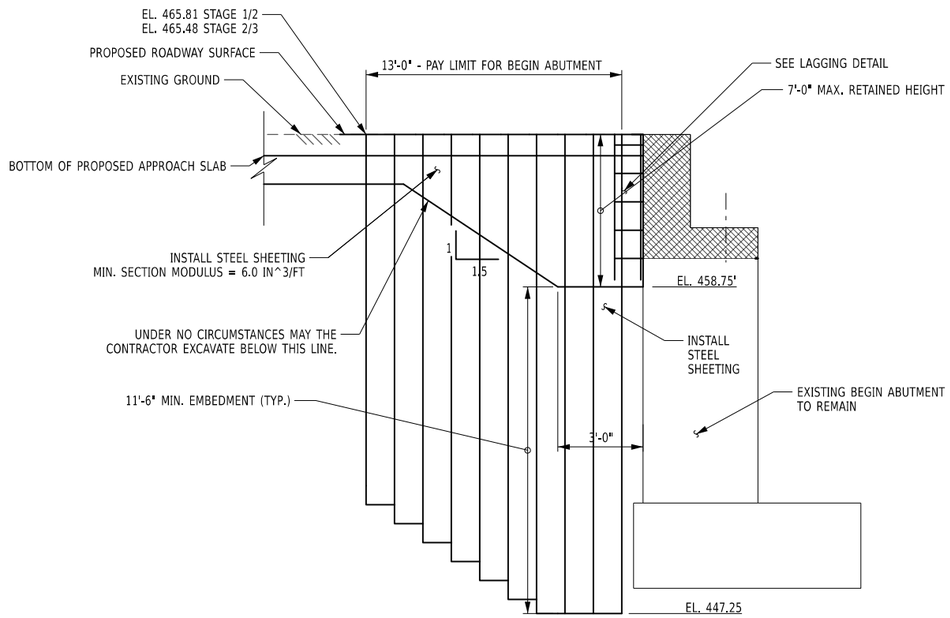

SECTION G-G
INTERIM SHEETING DETAIL

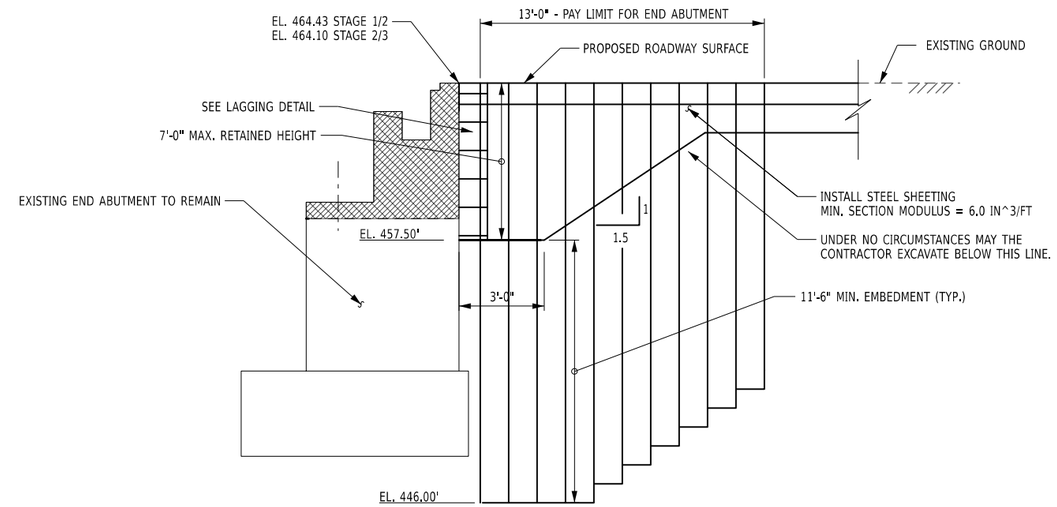

SECTION H-H
INTERIM SHEETING DETAIL

NOTES:

THE FOLLOWING INFORMATION WAS USED IN THE DESIGN OF THE STEEL SHEETING:

LOCATION	ELEVATION (FT)	UNIT WEIGHT (LBS/FT³)	FRICTION ANGLE (DEGRESS)	COHESION (LBS/FT²)	WALL FRICTION (DEGREES)
BEGIN ABUTMENT	EXISTING GRADE TO EL. 447.25	120	30	0	0
END ABUTMENT	EXISTING GRADE TO EL. 446.0	120	30	0	0

A. DIVIDE THE PASSIVE EARTH PRESSURE COEFFICIENT (Kp) BY 1.25.

B. GROUNDWATER IS ASSUMED TO BE AT ELEVATION 446.00'.

C. A SURCHARGE LOAD OF 250 POUNDS PER SQUARE FOOT IS ASSUMED AT THE TOP OF THE WALL.

D. THE MINIMUM SECTION MODULUS OF THE SHEETING ASSUMES AN ALLOWABLE STEEL STRESS OF 25 KSI.

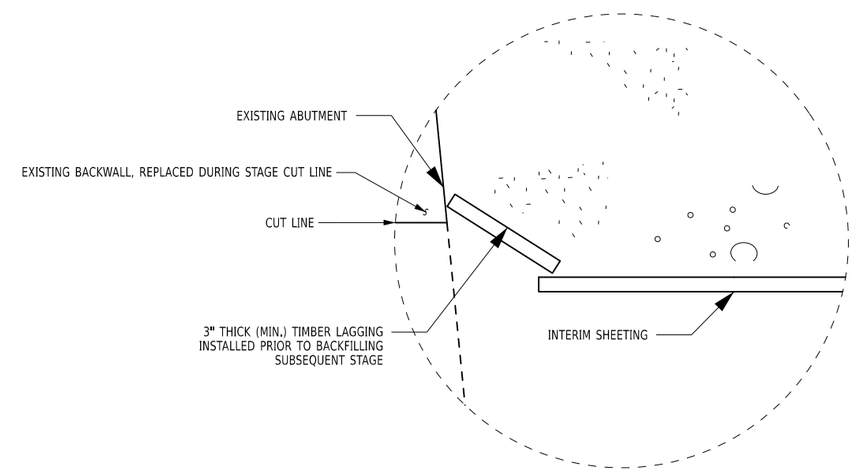

LAGGING DETAIL

NOTES:

1. FOR LEGEND, SEE DWG. NO. ST-10.
2. THE CONTRACTOR TO MONITOR POINTS ON THE ABUTMENT AND FOOTINGS TO CONFIRM THEY ARE NOT DRIFTING OR CRACKING OVER THE COURSE OF THE PROJECT, IN THE EVENT THAT THE ABUTMENT OR FOOTING IS FOUND TO MOVE BEYOND AN ACCEPTABLE CRITERION, THE CONTRACTOR WILL BE REQUIRED TO FIX IT. OPTICAL OR VIBRATION MONITORING ON SITE MAY BE OF SOME AID IN PURSUIT OF THIS.

ALTERED ON:

AFFIXED ON: 08/10/2026

SIGNATURE:
STAMP:

SIGNATURE:
STAMP:

STATE OF NEW YORK
EDWIN TWISS
EXCELSIOR
080650
LICENSED PROFESSIONAL ENGINEER

IT IS A VIOLATION OF LAW FOR ANY PERSON, UNLESS THEY ARE ACTING UNDER THE DIRECTION OF A LICENSED PROFESSIONAL ENGINEER, ARCHITECT, LANDSCAPE ARCHITECT, OR LAND SURVEYOR, TO ALTER AN ITEM IN ANY WAY. IF AN ITEM BEARING THE STAMP OF A LICENSED PROFESSIONAL IS ALTERED, THE ALTERING ENGINEER, ARCHITECT, LANDSCAPE ARCHITECT, OR LAND SURVEYOR SHALL STAMP THE DOCUMENT AND INCLUDE THE NOTATION "ALTERED BY" FOLLOWED BY THEIR SIGNATURE, THE DATE OF SUCH ALTERATION, AND A SPECIFIC DESCRIPTION OF THE ALTERATION.

REVISIONS

DATE	DESCRIPTION	BY	SYM.

NEW YORK STATE | Thruway Authority

AECOM

TITLE OF PROJECT
SUPERSTRUCTURE REPLACEMENT
GSP CONNECTOR OVER NYS THRUWAY

LOCATION OF PROJECT
BIN 5514049 (MP 23.53)

TITLE OF DRAWING
EXCAVATION AND EMBANKMENT SECTIONS (2 OF 2)

CONTRACT NUMBER: TANY 26-23B

DATE: JULY 2026

DRAWING NUMBER: ST-12

DESIGN SUPERVISOR: RWL
DESIGNED BY: IW / MR / VZ
DRAFTED BY: AICE
CHECKED BY: IW / MR / VZ
CHECKED BY: AICE

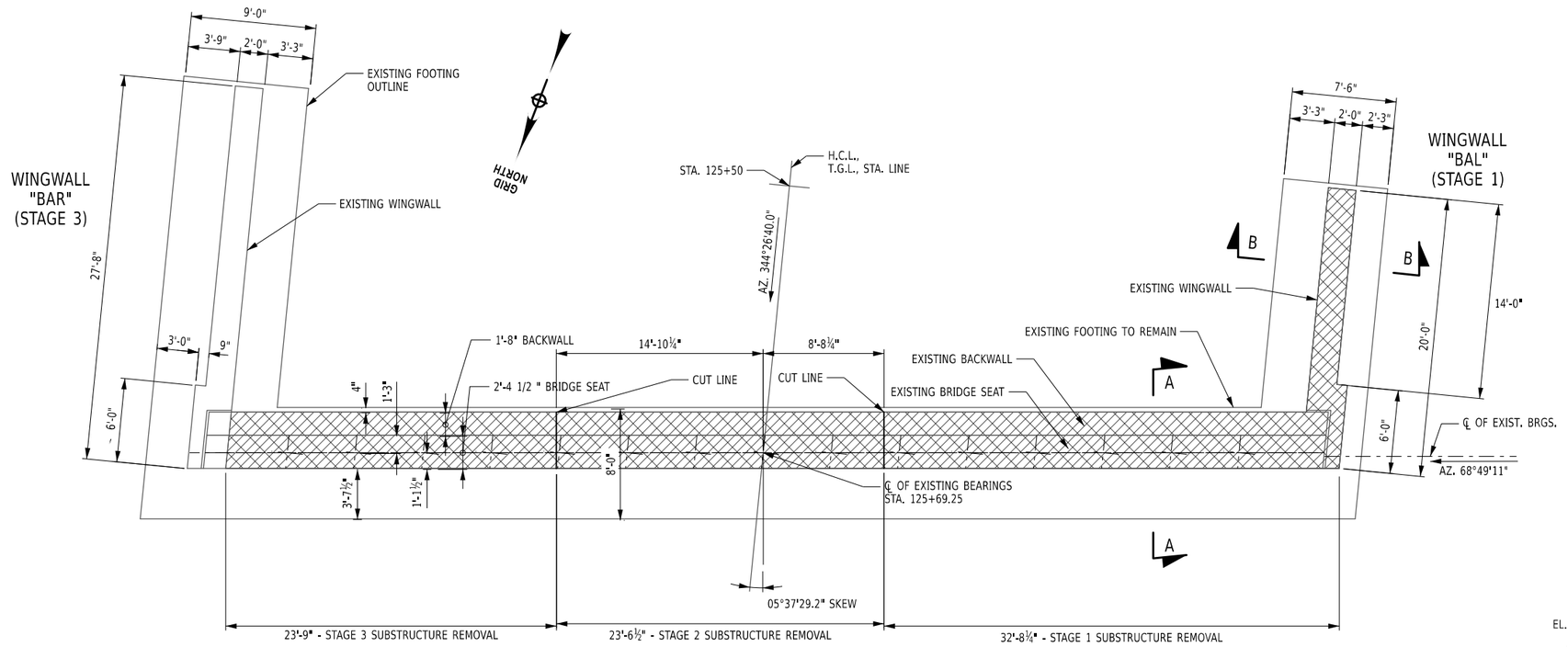

BEGIN ABUTMENT REMOVAL PLAN

CONCRETE REPAIR NOTE:

AREA MARKED ON THE PLANS FOR REMOVAL AND REPLACEMENT OF STRUCTURAL CONCRETE UNDER ITEM 582.0052, ARE THE MINIMUMS DETERMINED BY IN-DEPTH FIELD INSPECTION REPORTS AT THE TIME OF DESIGN. THE CONTRACTOR SHALL VERIFY ALL LOCATIONS AND GET APPROVAL FROM THE EIC PRIOR TO COMMENCING REMOVAL OPERATIONS. ONCE THE EIC HAS VERIFIED THE SOUND CONCRETE HAS BEEN REACHED, THE CONTRACTOR SHALL REMOVE AN ADDITIONAL 6" BEYOND EACH SIDE OF UNSOUND CONCRETE PRIOR TO REPLACEMENT OPERATIONS. THE AREA OF CONCRETE REMOVAL SHALL BE MARKED ON THE ABUTMENT, WINGWALL, U-WALL, OR PIER, AND A SAWCUT SHALL BE MADE AROUND THIS MARKED PERIMETER, PAID FOR UNDER ITEM 582.0052.

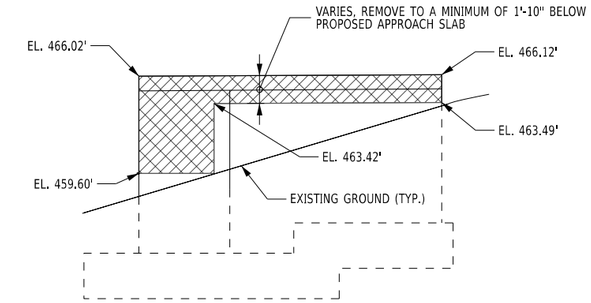

WINGWALL "BAL" ELEVATION

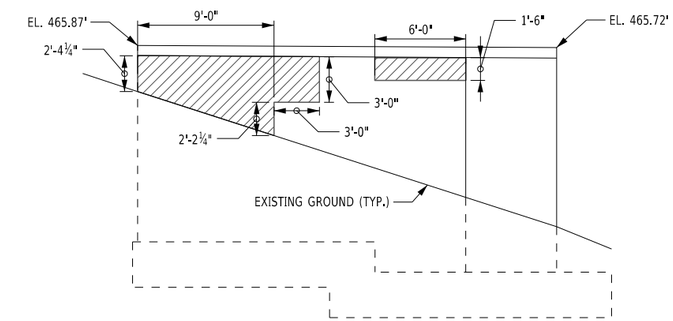

WINGWALL "BAR" ELEVATION

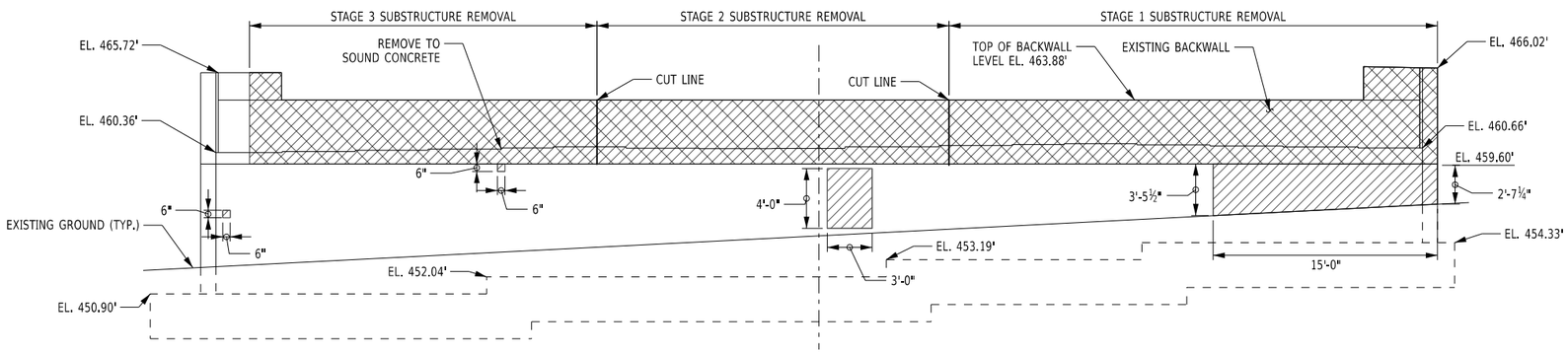

BEGIN ABUTMENT REMOVAL ELEVATION

5 0 5 10 15 20'

1" = 10'

CONCRETE REMOVAL TABLE			
LOCATION		ITEM 580.01 REMOVAL OF STRUCTURAL CONCRETE (CY)	ITEM 582.0052 REMOVAL AND REPLACEMENT OF STRUCTURAL CONCRETE (SF)
STAGE 1	BACKWALL	9.0	-
	STEM	3.7	45.5
	BAL WW	4.3	-
STAGE 2	BACKWALL	6.3	-
	STEM	2.4	12.0
STAGE 3	BACKWALL	6.5	-
	STEM	2.1	0.5
	BAR WW	-	51.94

NOTES:

NOT ALL DIMENSIONS SHOWN FOR CLARITY, SEE RECORD PLANS FOR DIMENSIONS.

CONTRACTOR SHALL VERIFY EXISTING ELEVATIONS AND DIMENSIONS PRIOR TO COMMENCING WORK.

FOR CONCRETE REPAIR DETAILS, SEE DWG. NO. ST-32.

"BAR" BEGIN ABUTMENT RIGHT.

"BAL" BEGIN ABUTMENT LEFT.

FOR SECTIONS A-A AND B-B, SEE DWG. NO. ST-16.

* VERTICAL DATUM CORRECTION OF -0.98 FEET APPLIED TO EXISTING SUBSTRUCTURE ELEVATIONS

ITEM 580.01 - REMOVAL OF STRUCTURAL CONCRETE

ITEM 582.0052 - REMOVAL AND REPLACEMENT OF STRUCTURAL CONCRETE

ALTERED ON:

AFFIXED ON: 08/10/2026

SIGNATURE:
STAMP:

SIGNATURE:
STAMP:

STATE OF NEW YORK · EDWIN TWISS · EXCELSIOR · 080650 · LICENSED PROFESSIONAL ENGINEER

IT IS A VIOLATION OF LAW FOR ANY PERSON, UNLESS THEY ARE ACTING UNDER THE DIRECTION OF A LICENSED PROFESSIONAL ENGINEER, ARCHITECT, LANDSCAPE ARCHITECT, OR LAND SURVEYOR, TO ALTER AN ITEM IN ANY WAY. IF AN ITEM BEARING THE STAMP OF A LICENSED PROFESSIONAL IS ALTERED, THE ALTERING ENGINEER, ARCHITECT, LANDSCAPE ARCHITECT, OR LAND SURVEYOR SHALL STAMP THE DOCUMENT AND INCLUDE THE NOTATION "ALTERED BY" FOLLOWED BY THEIR SIGNATURE, THE DATE OF SUCH ALTERATION, AND A SPECIFIC DESCRIPTION OF THE ALTERATION.

REVISIONS

DATE	DESCRIPTION	BY	SYM.

NEW YORK STATE | Thruway Authority

AECOM

TITLE OF PROJECT
SUPERSTRUCTURE REPLACEMENT
GSP CONNECTOR OVER NYS THRUWAY

LOCATION OF PROJECT
BIN 5514049 (MP 23.53)

TITLE OF DRAWING
BEGIN ABUTMENT REMOVAL PLAN & ELEVATION

CONTRACT NUMBER:
TANY 26-23B

DATE:
JULY 2026

DRAWING NUMBER:
ST-13

AICE CHECKED BY: IW / MR / VZ DRAFTED BY: AICE DESIGNED BY: IW / MR / VZ RWL DESIGN SUPERVISOR:

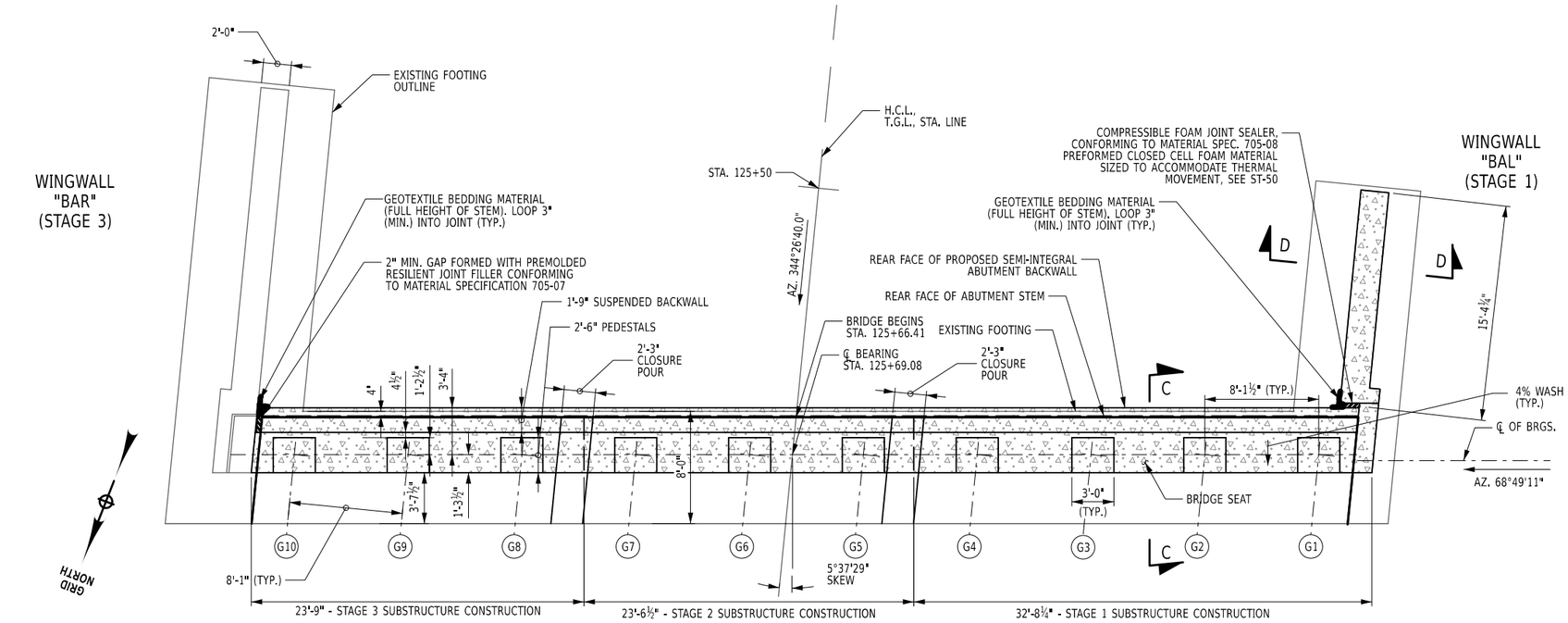

BEGIN ABUTMENT RECONSTRUCTION PLAN

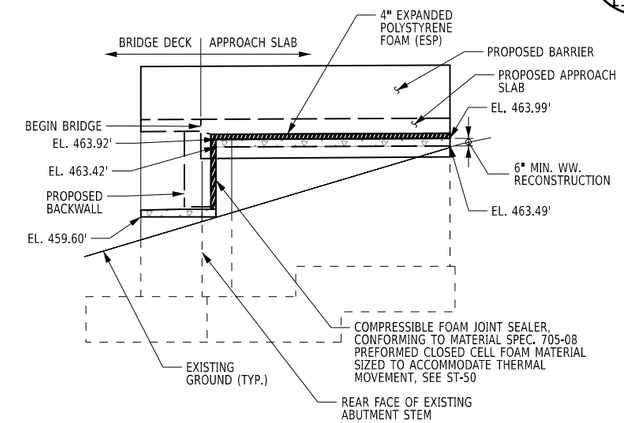

WINGWALL "BAL" ELEVATION

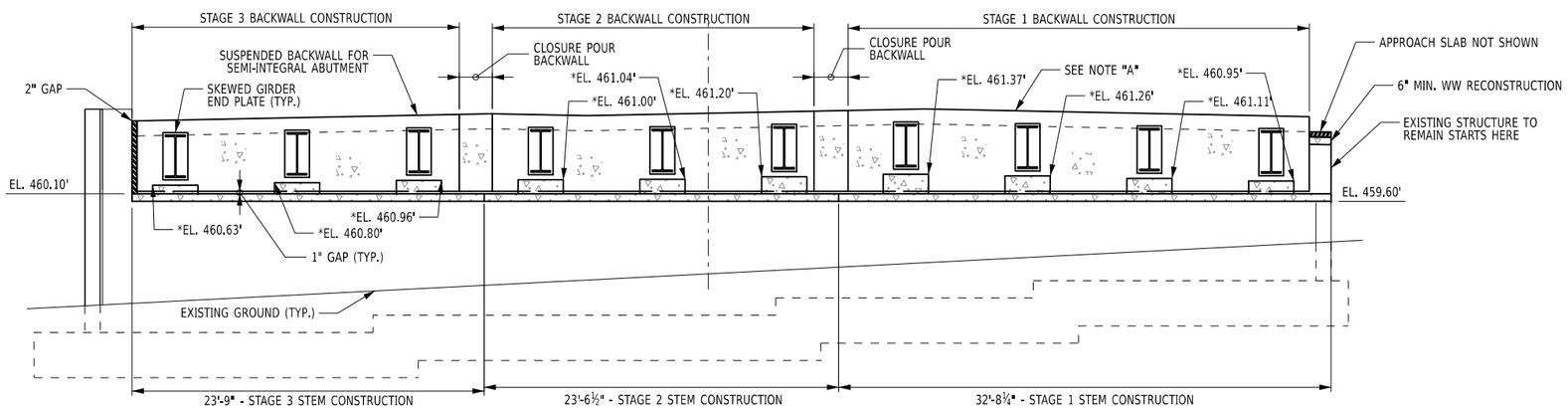

BEGIN ABUTMENT RECONSTRUCTION ELEVATION

5 0 5 10 15 20'
1" = 10'

ITEM 555.0021 - CONCRETE FOR STRUCTURES

CONCRETE TABLE			
LOCATION		ITEM 555.0021 CONCRETE FOR STRUCTURES (CY)	ITEM 559.02 PROTECTIVE SEALING OF NEW CONCRETE (SF)
STAGE 1	BACKWALL	8.6	190
	STEM	2.5	150
	BAL WW	0.6	16
	PEDESTALS	1.2	47
CLOS. POUR	BACKWALL	0.6	12
STAGE 2	BACKWALL	5.8	130
	STEM	1.8	107
	PEDESTALS	0.8	32
CLOS. POUR	BACKWALL	0.6	11
STAGE 3	BACKWALL	5.6	124
	STEM	1.8	108
	PEDESTALS	0.6	23

NOTES:

(G3) DENOTES GIRDER NUMBER

NOT ALL DIMENSIONS SHOWN. FOR CLARITY, SEE RECORD PLANS FOR DIMENSIONS.

CONTRACTOR SHALL VERIFY EXISTING ELEVATIONS AND DIMENSIONS PRIOR TO WORK.

NOTE "A": TOP OF BACKWALL SHALL FOLLOW THE FINISH GRADE AND CROSS-SLOPE OF THE ROADWAY.

COST OF JOINT FILLERS AND COMPRESSIBLE FOAM JOINT SEALERS TO BE INCLUDED IN THE COST OF ITEM 555.0021.

* ELEVATIONS TO BE ADJUSTED IF PLATE GIRDER OPTION IS USED.

NOTES (CONT.):

CONCRETE PLACED UNDER ITEM 555.0021 SHALL BE SEALED WITH ITEM 559.02, AND ALL REPAIRED CONCRETE UNDER ITEM 582.0052 AND EXISTING EXPOSED CONCRETE SHALL BE SEALED UNDER ITEM 559.04.

FOR REMOVAL AND REPLACEMENT DETAILS, SEE DWG. ST-13.

FOR CONCRETE REPAIR DETAILS, SEE DWG. NO. ST-32.

FOR "BAR" & "BAL" DEFINITIONS, SEE DWG. NO. ST-13.

FOR SECTIONS C-C AND D-D, SEE DWG. NO. ST-16.

FOR PEDESTAL AND ANCHORE BOLT LAYOUT, SEE DWG. NO. ST-30.

FOR BACKWALL REINFORCEMENT DETAILS, SEE DWG. NO. ST-31.

ALTERED ON:

AFFIXED ON: 08/10/2026

SIGNATURE:
STAMP:

SIGNATURE:
STAMP:

STATE OF NEW YORK
EDWIN TWISS
080650
LICENSED PROFESSIONAL ENGINEER

IT IS A VIOLATION OF LAW FOR ANY PERSON, UNLESS THEY ARE ACTING UNDER THE DIRECTION OF A LICENSED PROFESSIONAL ENGINEER, ARCHITECT, LANDSCAPE ARCHITECT, OR LAND SURVEYOR, TO ALTER AN ITEM IN ANY WAY. IF AN ITEM BEARING THE STAMP OF A LICENSED PROFESSIONAL IS ALTERED, THE ALTERING ENGINEER, ARCHITECT, LANDSCAPE ARCHITECT, OR LAND SURVEYOR SHALL STAMP THE DOCUMENT AND INCLUDE THE NOTATION "ALTERED BY" FOLLOWED BY THEIR SIGNATURE, THE DATE OF SUCH ALTERATION, AND A SPECIFIC DESCRIPTION OF THE ALTERATION.

REVISIONS

DATE	DESCRIPTION	BY	SYM.

NEW YORK STATE | Thruway Authority

AECOM

TITLE OF PROJECT
SUPERSTRUCTURE REPLACEMENT
GSP CONNECTOR OVER NYS THRUWAY

LOCATION OF PROJECT
BIN 5514049 (MP 23.53)

TITLE OF DRAWING
BEGIN ABUTMENT REPAIR PLAN & ELEVATION

CONTRACT NUMBER:
TANY 26-23B

DATE:
JULY 2026

DRAWING NUMBER:
ST-14

AICE
CHECKED BY:
IW / MR / VZ
DRAFTED BY:
AICE
CHECKED BY:
IW / MR / VZ
DESIGNED BY:
RWL
DESIGN SUPERVISOR:

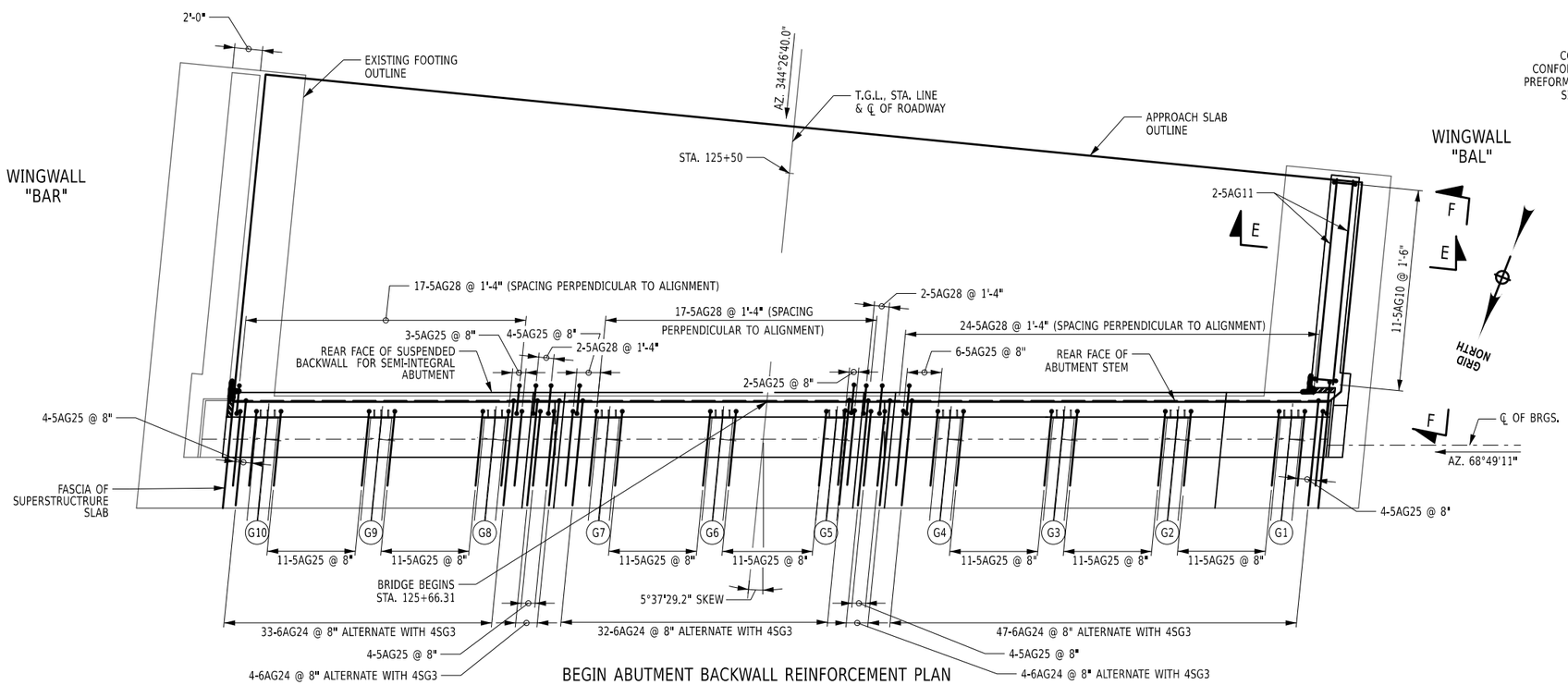

BEGIN ABUTMENT BACKWALL REINFORCEMENT PLAN

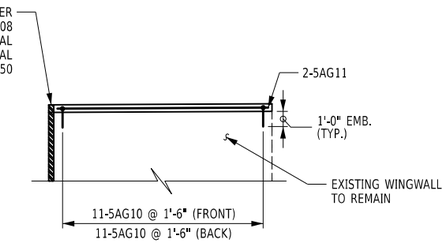

SECTION F-F

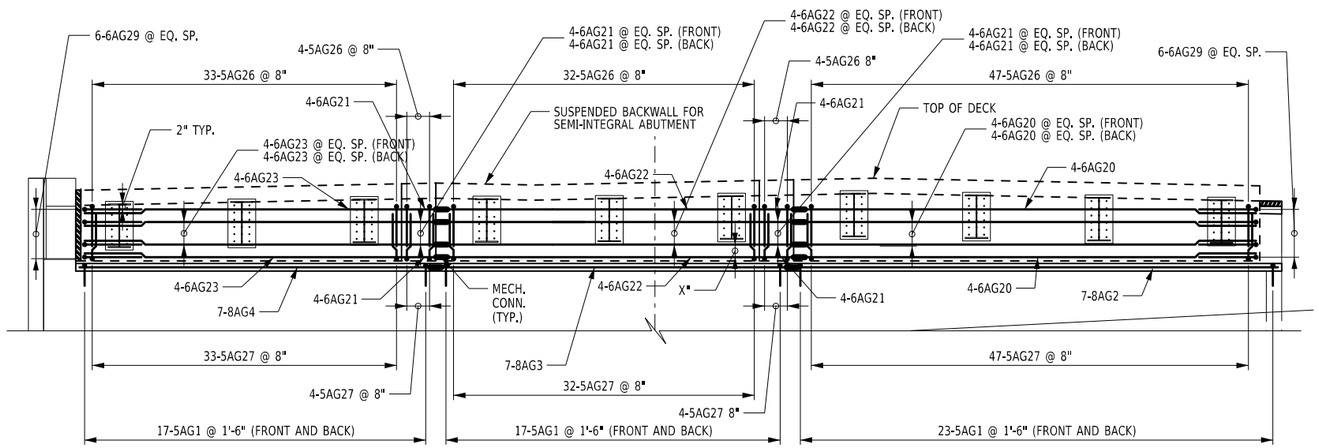

BEGIN ABUTMENT BACKWALL REINFORCEMENT ELEVATION

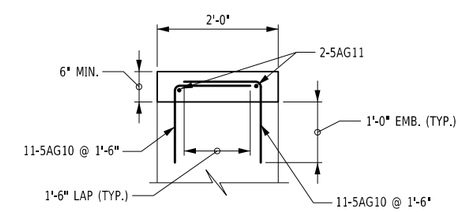

SECTION E-E

NOT TO SCALE

NOTES:

FOR PEDESTAL REINFORCEMENT, SEE DWG. NO. ST-30

PLAN VIEW SHOWS ONLY BARS EXTENDING FROM THE BACKWALL INTO DECK AND APPROACH SLAB FOR CLARITY.

ELEVATION VIEW SHOWS ONLY BARS CONTAINED WITHIN THE SEMI-INTEGRAL ABUTMENT STEM FOR CLARITY.

FOR ADDITIONAL REINFORCEMENT DETAIL IN THE BACKWALL, SEE DWG. NO. ST-31.

ALTERED ON:	AFFIXED ON: 08/10/2026
SIGNATURE: STAMP:	SIGNATURE: STAMP: STATE OF NEW YORK · EDWIN TWISS · 080650 · LICENSED PROFESSIONAL ENGINEER

IT IS A VIOLATION OF LAW FOR ANY PERSON, UNLESS THEY ARE ACTING UNDER THE DIRECTION OF A LICENSED PROFESSIONAL ENGINEER, ARCHITECT, LANDSCAPE ARCHITECT, OR LAND SURVEYOR, TO ALTER AN ITEM IN ANY WAY. IF AN ITEM BEARING THE STAMP OF A LICENSED PROFESSIONAL IS ALTERED, THE ALTERING ENGINEER, ARCHITECT, LANDSCAPE ARCHITECT, OR LAND SURVEYOR SHALL STAMP THE DOCUMENT AND INCLUDE THE NOTATION "ALTERED BY" FOLLOWED BY THEIR SIGNATURE, THE DATE OF SUCH ALTERATION, AND A SPECIFIC DESCRIPTION OF THE ALTERATION.

REVISIONS

DATE	DESCRIPTION	BY	SYM.

NEW YORK STATE | Thruway Authority

AECOM

TITLE OF PROJECT: SUPERSTRUCTURE REPLACEMENT GSP CONNECTOR OVER NYS THRUWAY

LOCATION OF PROJECT: BIN 5514049 (MP 23.53)

TITLE OF DRAWING: BEGIN ABUTMENT REINFORCEMENT DETAILS

CONTRACT NUMBER: TANY 26-23B

DATE: JULY 2026

DRAWING NUMBER: ST-15

DESIGN SUPERVISOR: RWL | DRAFTED BY: AICE | DESIGNED BY: IW / MR / VZ | CHECKED BY: AICE | CHECKED BY: IW / MR / VZ

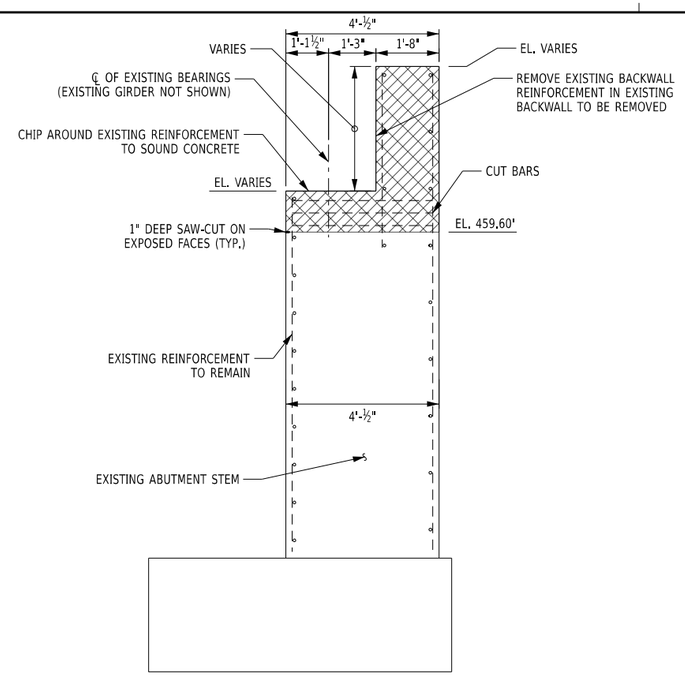

BACKWALL REMOVAL SECTION A-A

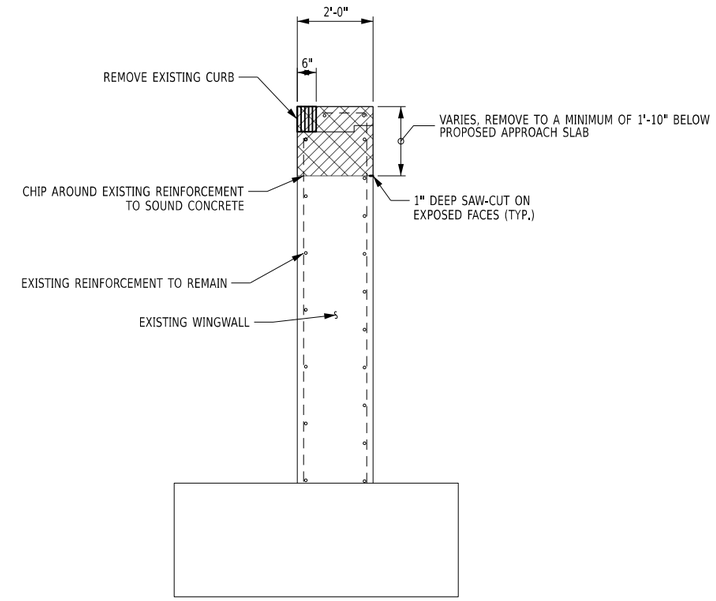

WINGWALL REMOVAL SECTION B-B

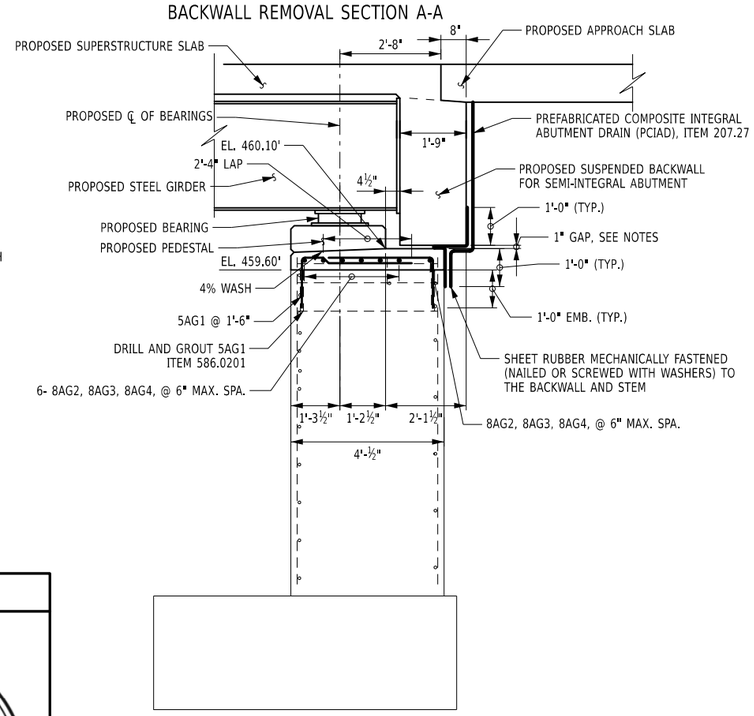

BACKWALL RECONSTRUCTION SECTION C-C

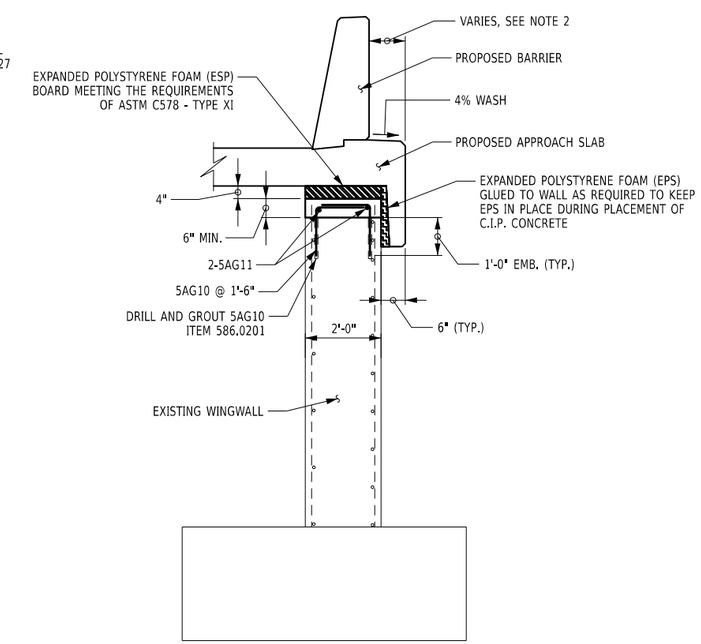

WINGWALL REPAIR SECTION D-D

NOTES

1. 1" EXPANDED POLYSTYRENE (EPS) FOAM (ASTM C578) WITH A COMPRESSIVE STRENGTH OF 25 PSI MAY BE USED AS A STAY-IN-PLACE FORM TO CREATE THE GAP. COST TO BE INCLUDED IN PRICE BID FOR THE ABUTMENT CONCRETE ITEM 555.0021.
2. CONTRACTOR SHALL FIELD VERIFY DIMENSION IN FIELD BASED ON THE APPROACH SLAB EXTENDING 6" BEYOND THE EXISTING FACE OF THE WINGWALL.
3. THE 1" DEEP SAWCUT ALONG THE FACES OF THE STEM SHALL BE PAID FOR UNDER THE REMOVAL OF STRUCTURAL CONCRETE (ITEM 580.01).
3. ALL REINFORCEMENT SHALL HAVE 2" COVER UNLESS OTHERWISE SPECIFIED.
4. FOR LOCATIONS OF SECTIONS, SEE DWG. ST-13 & ST-14.
5. FOR APPROACH SLAB DETAILS, SEE DWG. ST-47 THROUGH ST-49.

2 0 2 4 6 8'
1" = 4'

ALTERED ON:	AFFIXED ON: 08/10/2026
SIGNATURE: STAMP:	SIGNATURE: STAMP: STATE OF NEW YORK · EDWIN TWISS · EXCELSIOR · 080650 · LICENSED PROFESSIONAL ENGINEER

IT IS A VIOLATION OF LAW FOR ANY PERSON, UNLESS THEY ARE ACTING UNDER THE DIRECTION OF A LICENSED PROFESSIONAL ENGINEER, ARCHITECT, LANDSCAPE ARCHITECT, OR LAND SURVEYOR, TO ALTER AN ITEM IN ANY WAY. IF AN ITEM BEARING THE STAMP OF A LICENSED PROFESSIONAL IS ALTERED, THE ALTERING ENGINEER, ARCHITECT, LANDSCAPE ARCHITECT, OR LAND SURVEYOR SHALL STAMP THE DOCUMENT AND INCLUDE THE NOTATION "ALTERED BY" FOLLOWED BY THEIR SIGNATURE, THE DATE OF SUCH ALTERATION, AND A SPECIFIC DESCRIPTION OF THE ALTERATION.

REVISIONS

DATE	DESCRIPTION	BY	SYM.

NEW YORK STATE | Thruway Authority

AECOM

TITLE OF PROJECT: SUPERSTRUCTURE REPLACEMENT GSP CONNECTOR OVER NYS THRUWAY

LOCATION OF PROJECT: BIN 5514049 (MP 23.53)

TITLE OF DRAWING: BEGIN ABUTMENT SECTIONS

CONTRACT NUMBER: TANY 26-23B

DATE: JULY 2026

DRAWING NUMBER: ST-16

DESIGN SUPERVISOR: RWL | DRAFTED BY: AICE | DESIGNED BY: IW / MR / VZ | CHECKED BY: IW / MR / VZ | CHECKED BY: AICE

CONCRETE REPAIR NOTE:

AREA MARKED ON THE PLANS FOR REMOVAL AND REPLACEMENT OF STRUCTURAL CONCRETE UNDER ITEM 582.0052, ARE THE MINIMUMS DETERMINED BY IN-DEPTH FIELD INSPECTION REPORTS AT THE TIME OF DESIGN. THE CONTRACTOR SHALL VERIFY ALL LOCATIONS AND GET APPROVAL FROM THE EIC PRIOR TO COMMENCING REMOVAL OPERATIONS. ONCE THE EIC HAS VERIFIED THE SOUND CONCRETE HAS BEEN REACHED, THE CONTRACTOR SHALL REMOVE AN ADDITIONAL 6" BEYOND EACH SIDE OF UNSOUND CONCRETE PRIOR TO REPLACEMENT OPERATIONS. THE AREA OF CONCRETE REMOVAL SHALL BE MARKED ON THE ABUTMENT, WINGWALL, U-WALL, OR PIER, AND A SAWCUT SHALL BE MADE AROUND THIS MARKED PERIMETER, PAID FOR UNDER ITEM 582.0052.

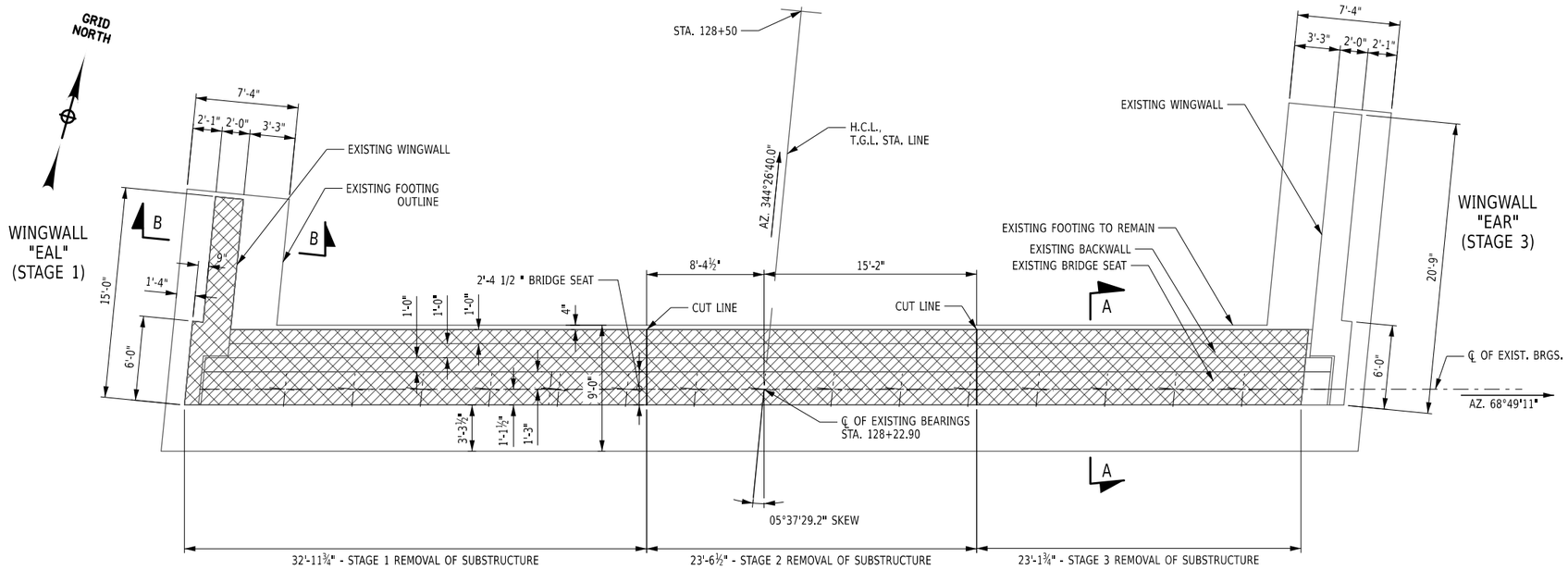

END ABUTMENT REMOVAL PLAN

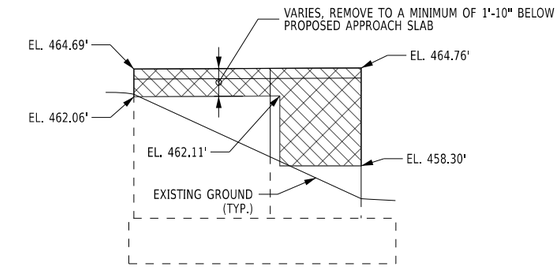

WINGWALL "EAL" ELEVATION

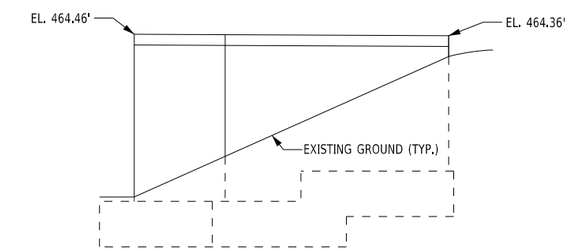

WINGWALL "EAR" ELEVATION

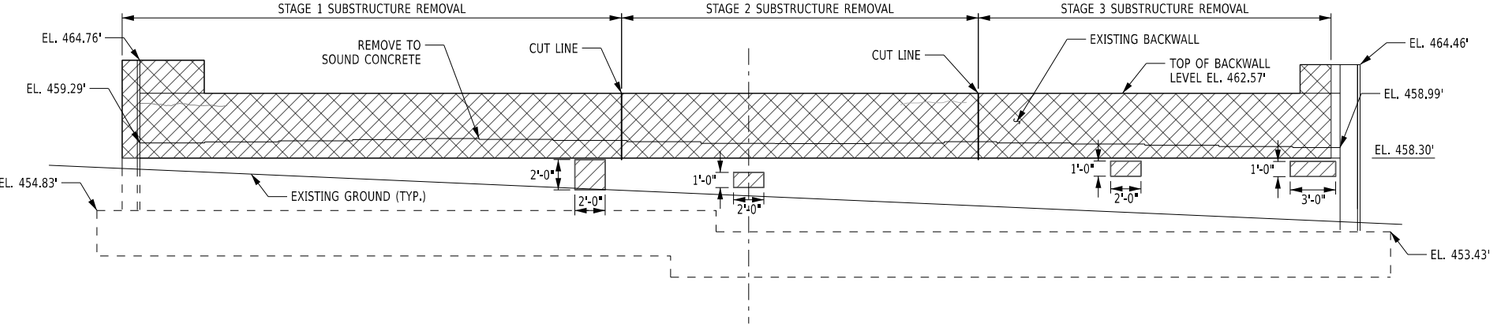

END ABUTMENT REMOVAL ELEVATION

5 0 5 10 15 20'

1" = 10'

CONCRETE REMOVAL TABLE			
	LOCATION	ITEM 580.01 REMOVAL OF STRUCTURAL CONCRETE (CY)	ITEM 582.0052 REMOVAL AND REPLACEMENT OF STRUCTURAL CONCRETE (SF)
STAGE 1	BACKWALL	6.5	-
	STEM	3.5	4.0
	EAL WW	3.9	-
STAGE 2	BACKWALL	6.3	-
	STEM	2.3	2.0
STAGE 3	BACKWALL	6.5	-
	STEM	2.0	5.0
	BAR WW	-	-

NOTES:

NOT ALL DIMENSIONS SHOWN FOR CLARITY, SEE RECORD PLANS FOR DIMENSIONS.

CONTRACTOR SHALL VERIFY EXISTING ELEVATIONS AND DIMENSIONS PRIOR TO COMMENCING WORK.

FOR CONCRETE REPAIR DETAILS, SEE DWG. NO. ST-32.

"EAR" END ABUTMENT RIGHT.

"EAL" END ABUTMENT LEFT.

FOR SECTIONS A-A AND B-B, SEE DWG. NO. ST-20.

* VERTICAL DATUM CORRECTION OF -0.98 FEET APPLIED TO EXISTING SUBSTRUCTURE ELEVATIONS

ITEM 580.01 - REMOVAL OF STRUCTURAL CONCRETE

ITEM 582.0052 - REMOVAL AND REPLACEMENT OF STRUCTURAL CONCRETE

ALTERED ON:	AFFIXED ON: 08/10/2026
SIGNATURE: STAMP:	SIGNATURE: STAMP: STATE OF NEW YORK · EDWIN TWISS · 080650 · LICENSED PROFESSIONAL ENGINEER

IT IS A VIOLATION OF LAW FOR ANY PERSON, UNLESS THEY ARE ACTING UNDER THE DIRECTION OF A LICENSED PROFESSIONAL ENGINEER, ARCHITECT, LANDSCAPE ARCHITECT, OR LAND SURVEYOR, TO ALTER AN ITEM IN ANY WAY. IF AN ITEM BEARING THE STAMP OF A LICENSED PROFESSIONAL IS ALTERED, THE ALTERING ENGINEER, ARCHITECT, LANDSCAPE ARCHITECT, OR LAND SURVEYOR SHALL STAMP THE DOCUMENT AND INCLUDE THE NOTATION "ALTERED BY" FOLLOWED BY THEIR SIGNATURE, THE DATE OF SUCH ALTERATION, AND A SPECIFIC DESCRIPTION OF THE ALTERATION.

REVISIONS

DATE	DESCRIPTION	BY	SYM.

NEW YORK STATE | Thruway Authority

AECOM

TITLE OF PROJECT: SUPERSTRUCTURE REPLACEMENT GSP CONNECTOR OVER NYS THRUWAY

LOCATION OF PROJECT: BIN 5514049 (MP 23.53)

TITLE OF DRAWING: END ABUTMENT REMOVAL PLAN & ELEVATION

CONTRACT NUMBER: TANY 26-23B

DATE: JULY 2026

DRAWING NUMBER: ST-17

AICE CHECKED BY: IW / MR / VZ DRAFTED BY: AICE CHECKED BY: IW / MR / VZ DESIGNED BY: RWL DESIGN SUPERVISOR:

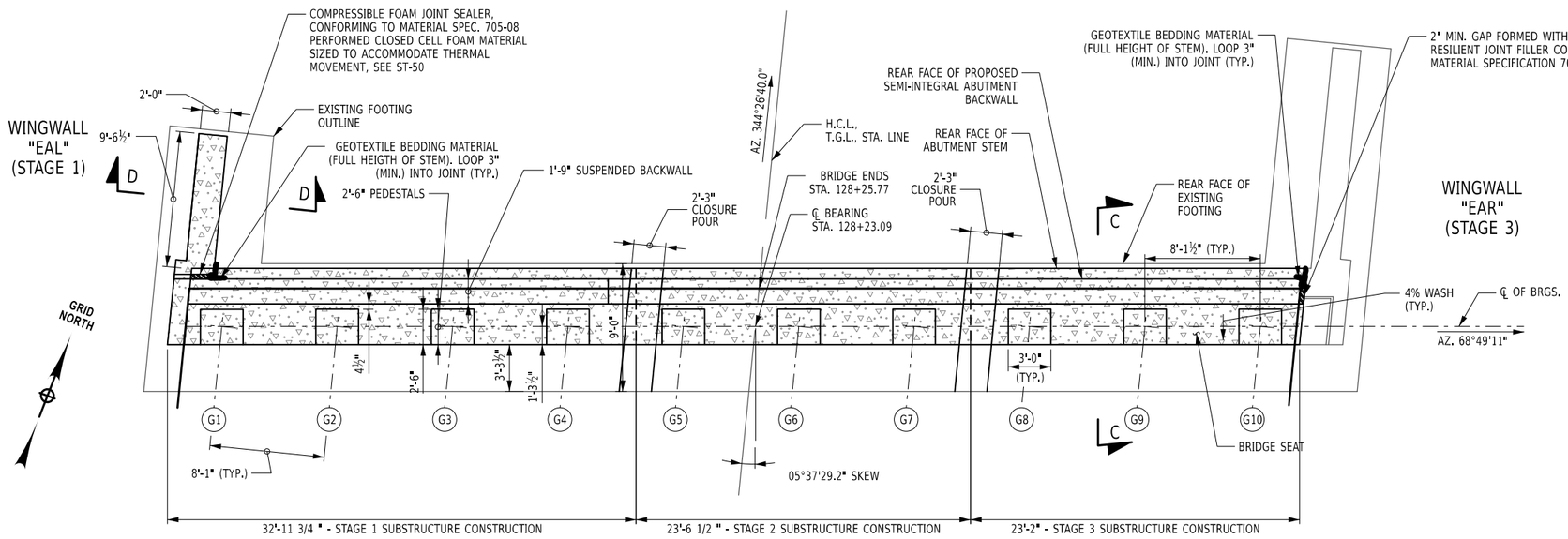

END ABUTMENT RECONSTRUCTION PLAN

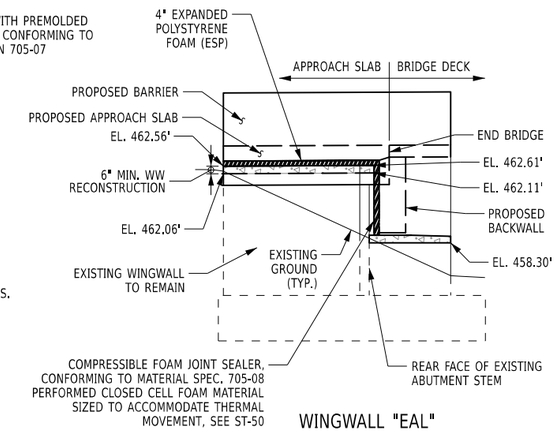

WINGWALL "EAL" ELEVATION

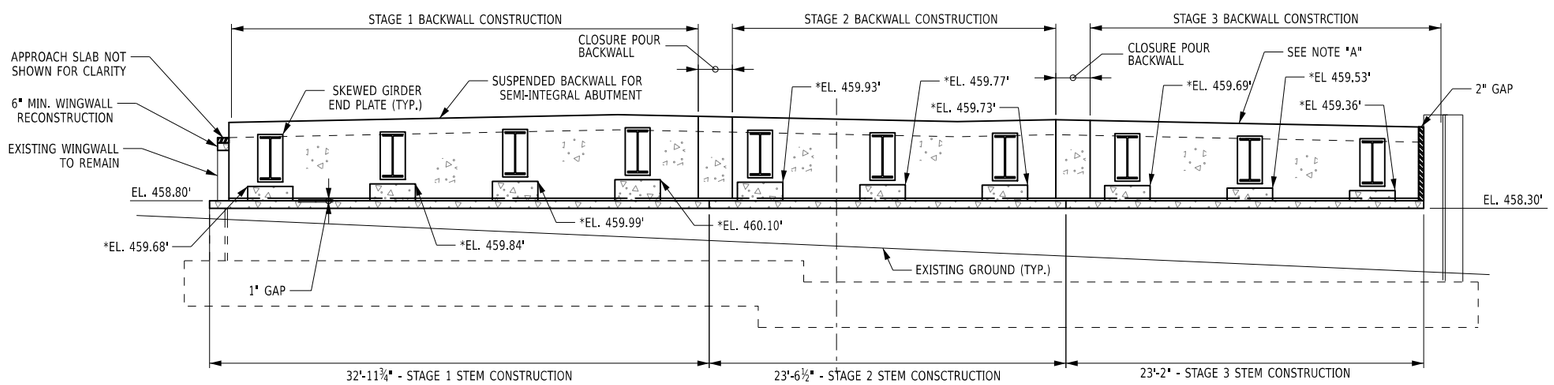

END ABUTMENT RECONSTRUCTION ELEVATION

5 0 5 10 15 20'
1" = 10'

ITEM 555.0021 - CONCRETE FOR STRUCTURES

NOTES:

(G5) DENOTES GIRDER NUMBER

NOT ALL DIMENSIONS SHOWN. FOR CLARITY, SEE RECORD PLANS FOR DIMENSIONS.

CONTRACTOR SHALL VERIFY EXISTING ELEVATIONS AND DIMENSIONS PRIOR TO WORK.

NOTE "A": TOP OF BACKWALL SHALL FOLLOW THE FINISH GRADE AND CROSS-SLOPE OF THE ROADWAY.

COST OF JOINT FILLERS AND COMPRESSIBLE FOAM JOINT SEALERS TO BE INCLUDED IN THE COST OF ITEM 555.0021.

* ELEVATION TO BE ADJUSTED IF PLATE GIRDER OPTION IS USED.

NOTES (CONT.):

CONCRETE PLACED UNDER ITEM 555.0021 SHALL BE SEALED WITH ITEM 559.02, AND ALL REPAIRED CONCRETE UNDER ITEM 582.0052 AND EXISTING EXPOSED CONCRETE SHALL BE SEALED UNDER ITEM 559.04.

FOR REMOVAL AND REPLACEMENT DETAILS, SEE DWG. ST-17.

FOR CONCRETE REPAIR DETAILS, SEE DWG. NO. ST-32.

FOR "EAR" & "EAL" DEFINITIONS, SEE DWG. NO. ST-17.

FOR SECTIONS C-C AND D-D, SEE DWG. NO. ST-20.

FOR PEDESTAL AND ANCHOR BOLT LAYOUT, SEE DWG. NO. ST-30.

FOR BACKWALL REINFORCEMENT DETAILS, SEE DWG. NO. ST-31.

CONCRETE TABLE

	LOCATION	ITEM 555.0021 CONCRETE FOR STRUCTURES (CY)	ITEM 559.02 PROTECTIVE SEALING OF NEW CONCRETE (SF)
STAGE 1	BACKWALL	8.8	192
	STEM	3.3	195
	EAL WW	0.4	24
	PEDESTALS	1.2	49
CLOS. POUR	BACKWALL	0.7	14
STAGE 2	BACKWALL	5.9	130
	STEM	2.3	138
	PEDESTALS	0.8	33
CLOS. POUR	BACKWALL	0.6	16
STAGE 3	BACKWALL	5.6	122
	STEM	2.4	140
	PEDESTALS	0.6	22

ALTERED ON:

AFFIXED ON: 08/10/2026

SIGNATURE:
STAMP:

SIGNATURE:
STAMP:

STATE OF NEW YORK · EDWIN TWISS · 080650 · LICENSED PROFESSIONAL ENGINEER

IT IS A VIOLATION OF LAW FOR ANY PERSON, UNLESS THEY ARE ACTING UNDER THE DIRECTION OF A LICENSED PROFESSIONAL ENGINEER, ARCHITECT, LANDSCAPE ARCHITECT, OR LAND SURVEYOR, TO ALTER AN ITEM IN ANY WAY. IF AN ITEM BEARING THE STAMP OF A LICENSED PROFESSIONAL IS ALTERED, THE ALTERING ENGINEER, ARCHITECT, LANDSCAPE ARCHITECT, OR LAND SURVEYOR SHALL STAMP THE DOCUMENT AND INCLUDE THE NOTATION "ALTERED BY" FOLLOWED BY THEIR SIGNATURE, THE DATE OF SUCH ALTERATION, AND A SPECIFIC DESCRIPTION OF THE ALTERATION.

REVISIONS

DATE	DESCRIPTION	BY	SYM.

NEW YORK STATE Thruway Authority

AECOM

TITLE OF PROJECT
SUPERSTRUCTURE REPLACEMENT
GSP CONNECTOR OVER NYS THRUWAY

LOCATION OF PROJECT
BIN 5514049 (MP 23.53)

TITLE OF DRAWING
END ABUTMENT REPAIR
PLAN & ELEVATION

CONTRACT NUMBER: TANY 26-23B

DATE: JULY 2026

DRAWING NUMBER: ST-18

DESIGN SUPERVISOR: RWL
DESIGNED BY: IW / MR / VZ
DRAFTED BY: IW / MR / VZ
CHECKED BY: AICE
CHECKED BY: AICE

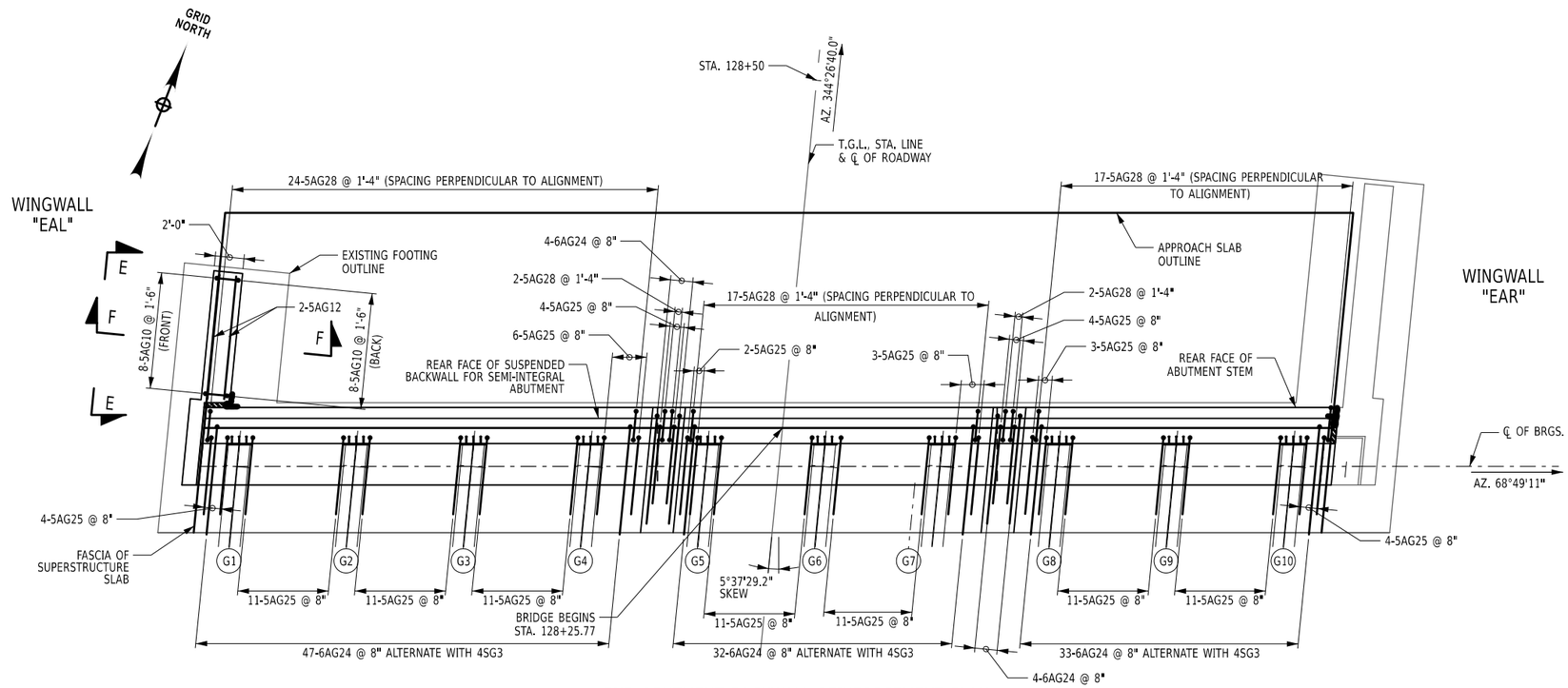

END ABUTMENT BACKWALL REINFORCEMENT PLAN

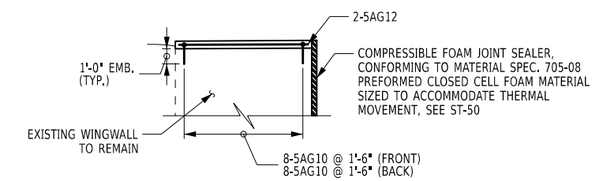

SECTION E-E

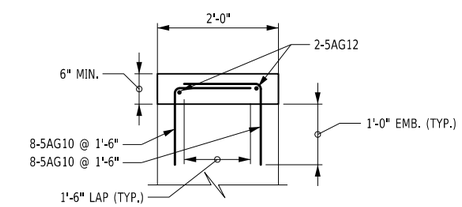

SECTION F-F

NOT TO SCALE

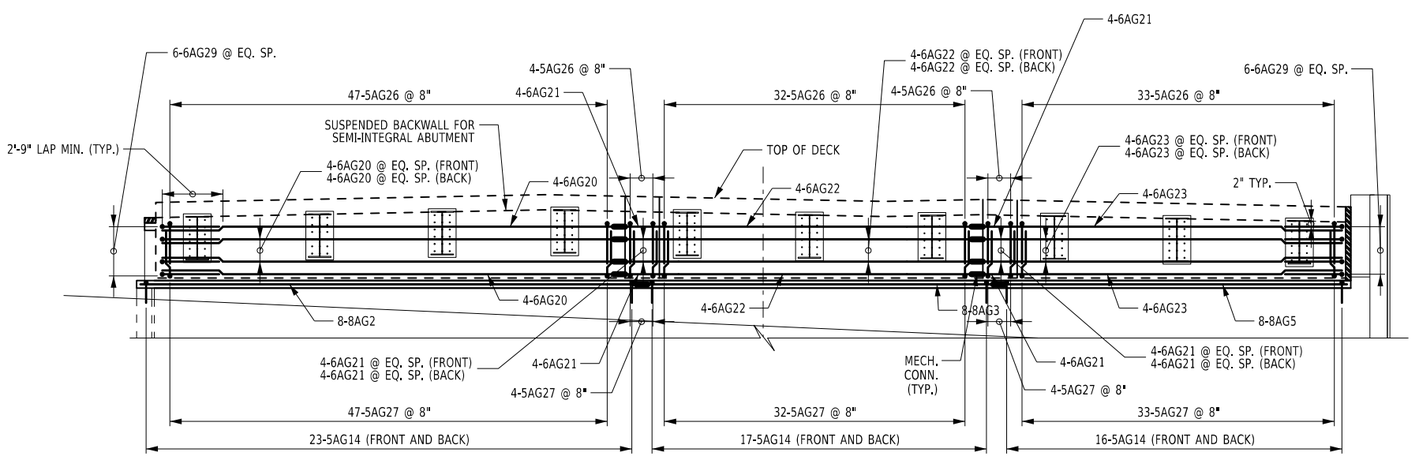

END ABUTMENT BACKWALL REINFORCEMENT ELEVATION

NOTES:

FOR PEDESTAL REINFORCEMENT, SEE DWG. NO. ST-30.

PLAN VIEW SHOWS ONLY BARS EXTENDING FROM THE BACKWALL INTO DECK AND APPROACH SLAB FOR CLARITY.

ELEVATION VIEW SHOWS ONLY BARS CONTAINED WITHIN THE SEMI-INTEGRAL ABUTMENT STEM FOR CLARITY.

FOR ADDITIONAL REINFORCEMENT DETAIL IN THE BACKWALL, SEE DWG. NO. ST-31.

ALTERED ON:	AFFIXED ON: 08/10/2026
SIGNATURE: STAMP:	SIGNATURE: STAMP: STATE OF NEW YORK · EDWIN TWISS · EXCELSIOR · 080650 · LICENSED PROFESSIONAL ENGINEER

IT IS A VIOLATION OF LAW FOR ANY PERSON, UNLESS THEY ARE ACTING UNDER THE DIRECTION OF A LICENSED PROFESSIONAL ENGINEER, ARCHITECT, LANDSCAPE ARCHITECT, OR LAND SURVEYOR, TO ALTER AN ITEM IN ANY WAY. IF AN ITEM BEARING THE STAMP OF A LICENSED PROFESSIONAL IS ALTERED, THE ALTERING ENGINEER, ARCHITECT, LANDSCAPE ARCHITECT, OR LAND SURVEYOR SHALL STAMP THE DOCUMENT AND INCLUDE THE NOTATION "ALTERED BY" FOLLOWED BY THEIR SIGNATURE, THE DATE OF SUCH ALTERATION, AND A SPECIFIC DESCRIPTION OF THE ALTERATION.

REVISIONS

DATE	DESCRIPTION	BY	SYM.

NEW YORK STATE | Thruway Authority

AECOM

TITLE OF PROJECT: SUPERSTRUCTURE REPLACEMENT GSP CONNECTOR OVER NYS THRUWAY

LOCATION OF PROJECT: BIN 5514049 (MP 23.53)

TITLE OF DRAWING: END ABUTMENT REINFORCEMENT DETAILS

CONTRACT NUMBER: TANY 26-23B

DATE: JULY 2026

DRAWING NUMBER: ST-19

AICE | CHECKED BY: | IW / MR / VZ | DRAFTED BY: | AICE | CHECKED BY: | IW / MR / VZ | DESIGNED BY: | RWL | DESIGN SUPERVISOR:

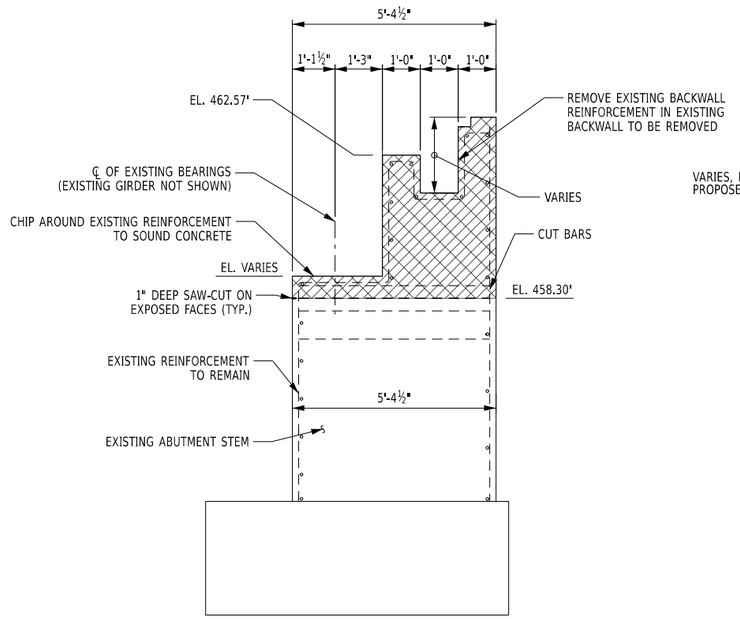

BACKWALL REMOVAL SECTION A-A

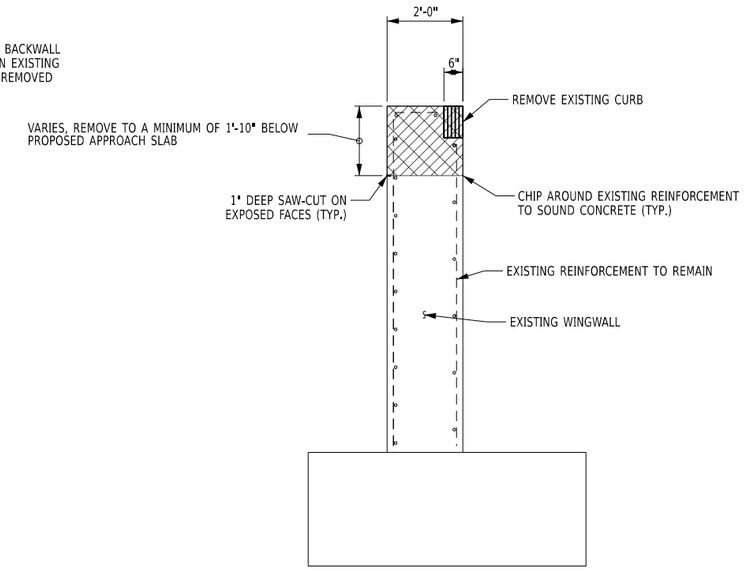

WINGWALL REMOVAL SECTION B-B

NOTES

1. 1" EXPANDED POLYSTYRENE (EPS) FOAM (ASTM C578) WITH A COMPRESSIVE STRENGTH OF 25 PSI MAY BE USED AS A STAY-IN-PLACE FORM TO CREATE THE GAP. COST TO BE INCLUDED IN PRICE BID FOR THE ABUTMENT CONCRETE ITEM 555.0021.
2. CONTRACTOR SHALL VERIFY DIMENSION IN FIELD BASED ON THE APPROACH SLAB EXTENDING 6" BEYOND THE EXISTING FACE OF THE WINGWALL.
3. THE 1" DEEP SAWCUT ALONG THE FACES OF THE STEM SHALL BE PAID FOR UNDER THE REMOVAL OF STRUCTURAL CONCRETE (ITEM 580.01).
4. ALL REINFORCEMENT SHALL HAVE 2" COVER UNLESS OTHERWISE SPECIFIED.
5. FOR LOCATIONS OF SECTIONS, SEE DWG. NO. ST-17 & ST-18.
6. FOR APPROACH SLAB DETAILS, SEE DWG. NOS. ST-47 THROUGH ST-49.

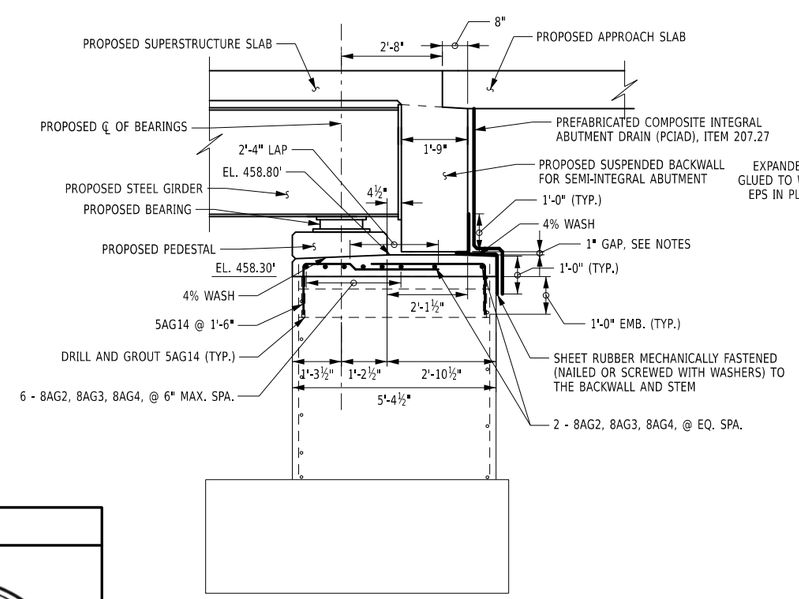

BACKWALL RECONSTRUCTION SECTION C-C

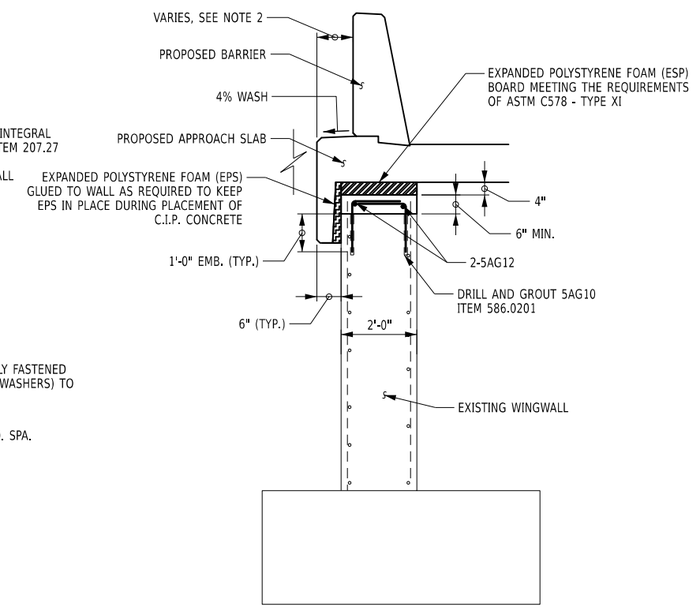

WINGWALL REPAIR SECTION D-D

ALTERED ON:	AFFIXED ON: 08/10/2026
SIGNATURE: STAMP:	SIGNATURE: STAMP: STATE OF NEW YORK · EDWIN TWISS · LICENSED PROFESSIONAL ENGINEER · 080650

IT IS A VIOLATION OF LAW FOR ANY PERSON, UNLESS THEY ARE ACTING UNDER THE DIRECTION OF A LICENSED PROFESSIONAL ENGINEER, ARCHITECT, LANDSCAPE ARCHITECT, OR LAND SURVEYOR, TO ALTER AN ITEM IN ANY WAY. IF AN ITEM BEARING THE STAMP OF A LICENSED PROFESSIONAL IS ALTERED, THE ALTERING ENGINEER, ARCHITECT, LANDSCAPE ARCHITECT, OR LAND SURVEYOR SHALL STAMP THE DOCUMENT AND INCLUDE THE NOTATION "ALTERED BY" FOLLOWED BY THEIR SIGNATURE, THE DATE OF SUCH ALTERATION, AND A SPECIFIC DESCRIPTION OF THE ALTERATION.

REVISIONS

DATE	DESCRIPTION	BY	SYM.

NEW YORK STATE Thruway Authority

AECOM

TITLE OF PROJECT: SUPERSTRUCTURE REPLACEMENT GSP CONNECTOR OVER NYS THRUWAY

LOCATION OF PROJECT: BIN 5514049 (MP 23.53)

TITLE OF DRAWING: END ABUTMENT SECTIONS

CONTRACT NUMBER: TANY 26-23B

DATE: JULY 2026

DRAWING NUMBER: ST-20

DESIGN SUPERVISOR: RWL | DESIGNED BY: IW / MR / VZ | DRAFTED BY: AICE | CHECKED BY: IW / MR / VZ | CHECKED BY: AICE

CONCRETE REPAIR TABLE	
AREA #	ITEM 582.0052
1	2.5' X 13'
2	2.5' X 6'
3	1' X 12'
4	4' X 1'
5	2' X 1'
6	4.5' X 1.5'
7	2.5' X 1'
8	15.5' X 2'
TOTAL THIS SHEET	105.8 SF

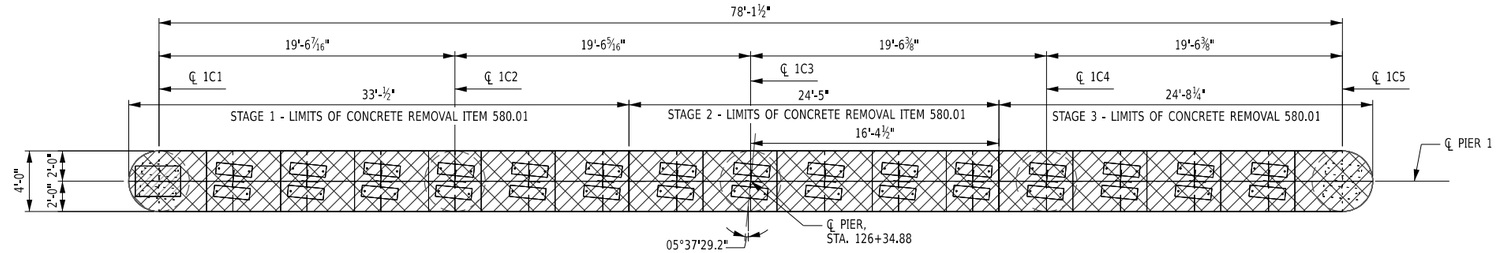

PIER CAP TOP PLAN

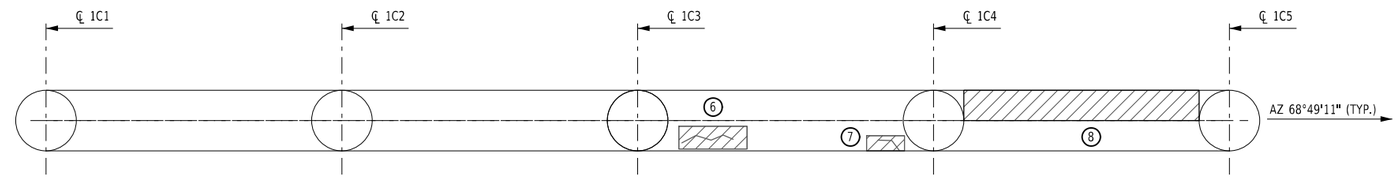

PIER CAP BOTTOM PLAN

LEGEND

ITEM 582.0052 - REMOVAL AND REPLACEMENT OF STRUCTURAL CONCRETE

ITEM 580.01 - REMOVAL OF STRUCTURAL CONCRETE

CONCRETE REMOVAL TABLE	
LOCATION	ITEM 580.01
STAGE 1	3.7
STAGE 2	2.3
STAGE 3	1.7
TOTAL THIS SHEET	7.7 CY

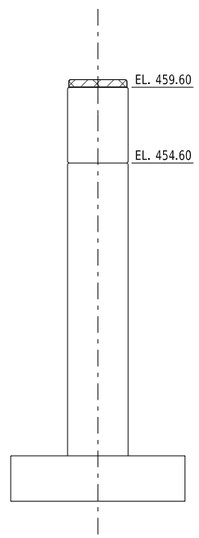

RIGHT ELEVATION

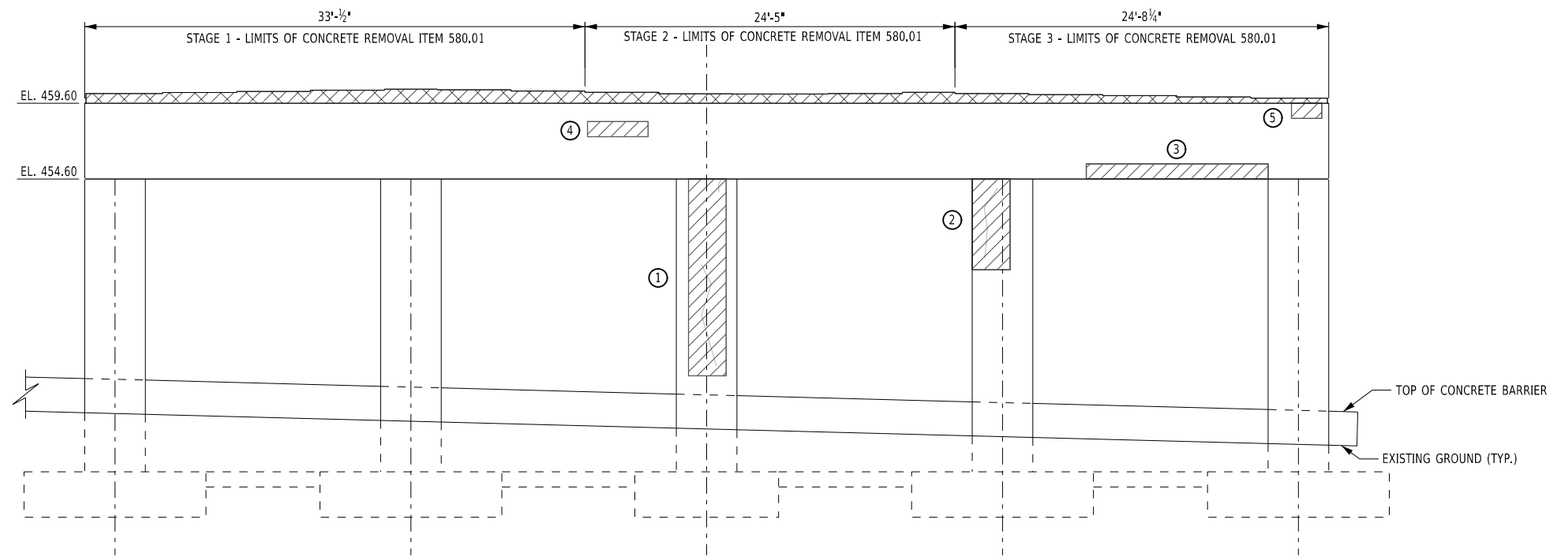

SOUTH ELEVATION (BEGIN)
(LOOKING UPSTATION)

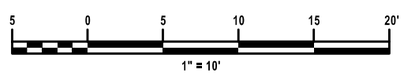

NOTES:

NOT ALL DIMENSIONS SHOWN FOR CLARITY, SEE AS-BUILT FOR DIMENSIONS.

CONTRACTOR SHALL VERIFY EXISTING ELEVATIONS AND DIMENSIONS PRIOR TO COMMENCING WORK.

FOR CONCRETE REPAIR DETAILS, SEE DWG. ST-32.

ALTERED ON:

AFFIXED ON: 08/10/2026

SIGNATURE:
STAMP:

SIGNATURE:
STAMP:

IT IS A VIOLATION OF LAW FOR ANY PERSON, UNLESS THEY ARE ACTING UNDER THE DIRECTION OF A LICENSED PROFESSIONAL ENGINEER, ARCHITECT, LANDSCAPE ARCHITECT, OR LAND SURVEYOR, TO ALTER AN ITEM IN ANY WAY. IF AN ITEM BEARING THE STAMP OF A LICENSED PROFESSIONAL IS ALTERED, THE ALTERING ENGINEER, ARCHITECT, LANDSCAPE ARCHITECT, OR LAND SURVEYOR SHALL STAMP THE DOCUMENT AND INCLUDE THE NOTATION "ALTERED BY" FOLLOWED BY THEIR SIGNATURE, THE DATE OF SUCH ALTERATION, AND A SPECIFIC DESCRIPTION OF THE ALTERATION.

REVISIONS

DATE	DESCRIPTION	BY	SYM.

NEW YORK STATE | Thruway Authority

AECOM

TITLE OF PROJECT
SUPERSTRUCTURE REPLACEMENT
GSP CONNECTOR OVER NYS THRUWAY

LOCATION OF PROJECT
BIN 5514049 (MP 23.53)

TITLE OF DRAWING
PIER 1
REPAIR PLAN & ELEVATION
(1 OF 2)

CONTRACT NUMBER: TANY 26-23B

DATE: JULY 2026

DRAWING NUMBER: ST-21

DESIGN SUPERVISOR: RWL
DESIGNED BY: IW / MR / VZ
CHECKED BY: IW / MR / VZ
DRAFTED BY: AICE
CHECKED BY: AICE

CONCRETE REPAIR TABLE	
AREA #	ITEM 582.0052
1	12' X 2'
2	2' X 3'
3	6.5' X 4'
4	9' X 4'
5	1.5' X 6.5'
6	4' X 1'
TOTAL THIS SHEET	105.8 SF

LEGEND

ITEM 582.0052 - REMOVAL AND REPLACEMENT OF STRUCTURAL CONCRETE

ITEM 580.01 - REMOVAL OF STRUCTURAL CONCRETE

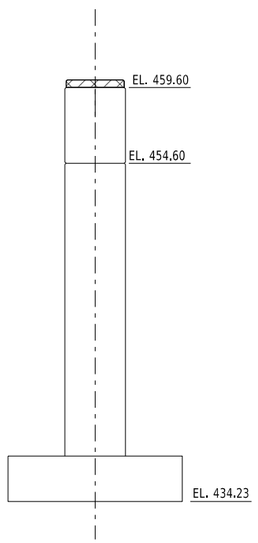

LEFT ELEVATION

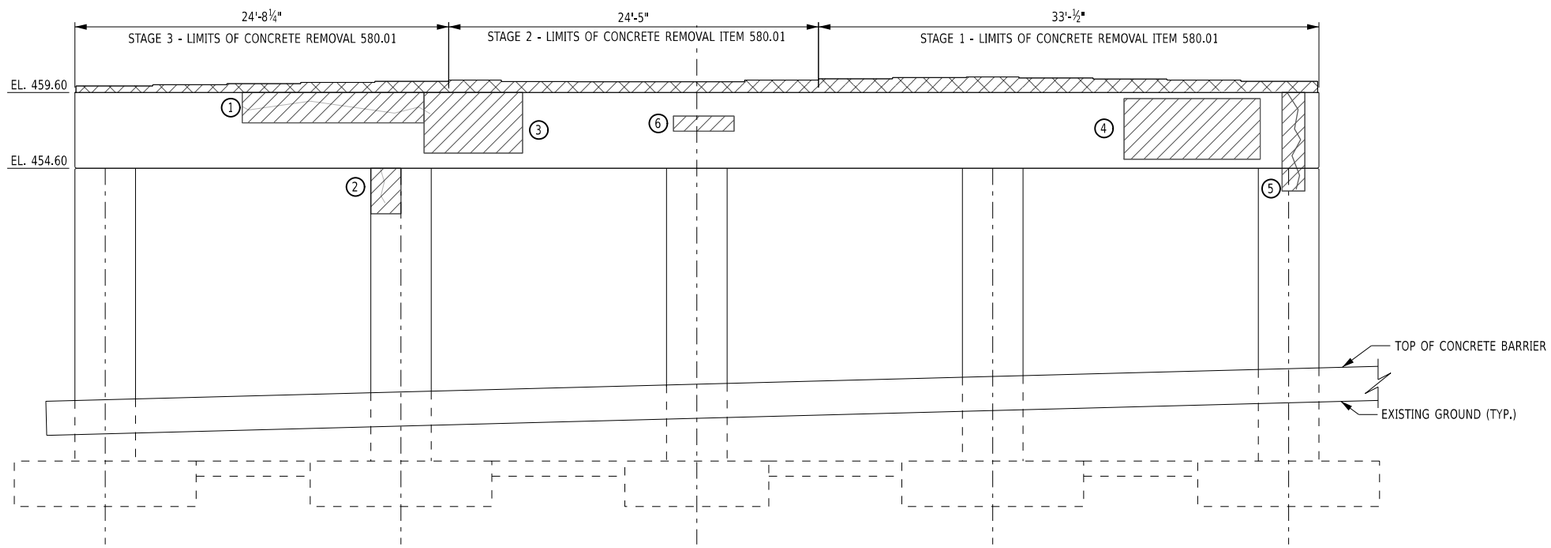

NORTH ELEVATION (END)
(LOOKING DOWNSTATION)

NOTES:

NOT ALL DIMENSIONS SHOWN FOR CLARITY, SEE AS-BUILT FOR DIMENSIONS.

CONTRACTOR SHALL VERIFY EXISTING ELEVATIONS AND DIMENSIONS PRIOR TO COMMENCING WORK.

FOR CONCRETE REPAIR DETAILS, SEE DWG. ST-32.

ALTERED ON:	AFFIXED ON: 08/10/2026
SIGNATURE: STAMP:	SIGNATURE: STAMP:

5 0 5 10 15 20'
1" = 10'

IT IS A VIOLATION OF LAW FOR ANY PERSON, UNLESS THEY ARE ACTING UNDER THE DIRECTION OF A LICENSED PROFESSIONAL ENGINEER, ARCHITECT, LANDSCAPE ARCHITECT, OR LAND SURVEYOR, TO ALTER AN ITEM IN ANY WAY. IF AN ITEM BEARING THE STAMP OF A LICENSED PROFESSIONAL IS ALTERED, THE ALTERING ENGINEER, ARCHITECT, LANDSCAPE ARCHITECT, OR LAND SURVEYOR SHALL STAMP THE DOCUMENT AND INCLUDE THE NOTATION "ALTERED BY" FOLLOWED BY THEIR SIGNATURE, THE DATE OF SUCH ALTERATION, AND A SPECIFIC DESCRIPTION OF THE ALTERATION.

REVISIONS

DATE	DESCRIPTION	BY	SYM.

NEW YORK STATE | Thruway Authority

AECOM

TITLE OF PROJECT
SUPERSTRUCTURE REPLACEMENT
GSP CONNECTOR OVER NYS THRUWAY

LOCATION OF PROJECT
BIN 5514049 (MP 23.53)

TITLE OF DRAWING
PIER 1
REPAIR PLAN & ELEVATION
(2 OF 2)

CONTRACT NUMBER: TANY 26-23B

DATE: JULY 2026

DRAWING NUMBER: ST-22

AICE
CHECKED BY:
IW / MR / VZ
DRAFTED BY:
AICE
CHECKED BY:
IW / MR / VZ
DESIGNED BY:
RWL
DESIGN SUPERVISOR:

CONCRETE TABLE		
LOCATION	ITEM 555.0021	ITEM 559.02
STAGE 1	3.4	231
STAGE 2	2.6	182
STAGE 3	2.4	176
TOTAL THIS SHEET	8.4 CY	589 SF

LEGEND

ITEM 555.0021 - CONCRETE FOR STRUCTURES, PERFORMANCE

ITEM 582.0052 - REMOVAL AND REPLACEMENT OF STRUCTURAL CONCRETE

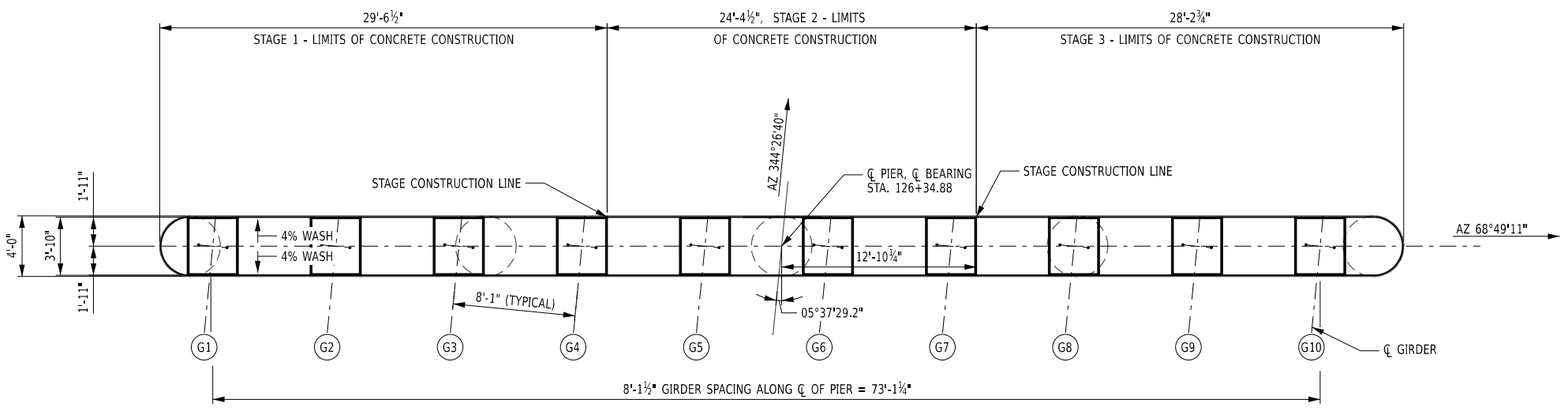

PIER CAP PLAN

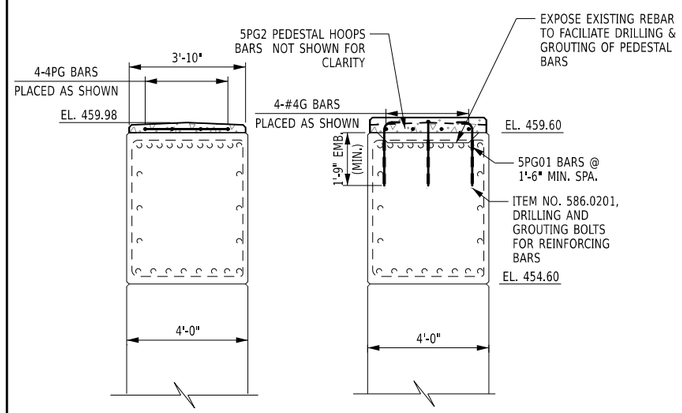

SECTION A-A
NOT TO SCALE

SECTION B-B
NOT TO SCALE

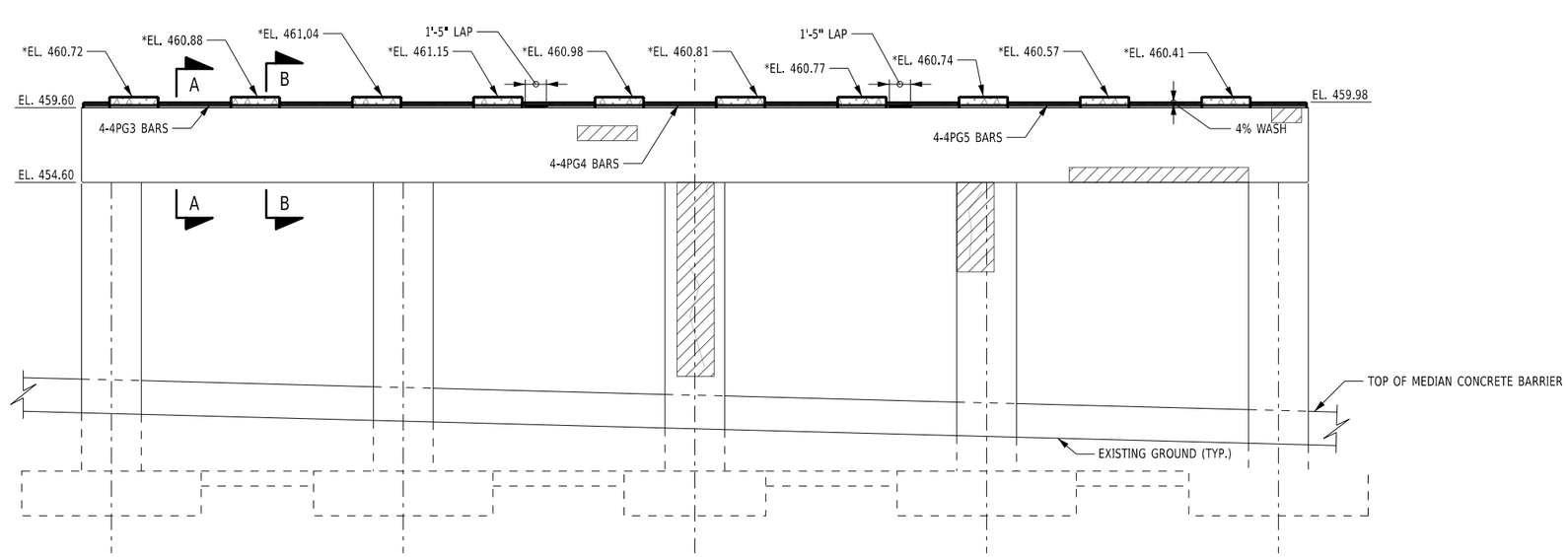

SOUTH ELEVATION (BEGIN)
(LOOKING UPSTATION)

5 0 5 10 15 20'
1" = 10'

NOTES:

ALL NEWLY PLACED AND EXISTING EXPOSED CONCRETE ON PEDESTALS, PIER CAPS, AND PIER COLUMNS SHALL BE SEALED.

CONCRETE PLACED UNDER ITEM 555.0021 SHALL BE SEALED WITH ITEM 559.02. ALL REPAIRED CONCRETE UNDER ITEM 582.0052 AND EXISTING EXPOSED CONCRETE SHALL BE SEALED UNDER ITEM 559.04.

UNLESS NOTED OTHERWISE, ALL CONCRETE EDGES TO HAVE 1" CHAMFER.

FOR ANCHOR LAYOUT, PEDESTAL LAYOUT & REINFORCEMENT, SEE ST-30.

* ELEVATIONS TO BE ADJUSTED IF PLATE GIRDER OPTION IS USED.

ALTERED ON:

AFFIXED ON: 08/10/2026

SIGNATURE:
STAMP:

SIGNATURE:
STAMP:

STATE OF NEW YORK
EDWIN TWISS
EXCELSIOR
080650
LICENSED PROFESSIONAL ENGINEER

IT IS A VIOLATION OF LAW FOR ANY PERSON, UNLESS THEY ARE ACTING UNDER THE DIRECTION OF A LICENSED PROFESSIONAL ENGINEER, ARCHITECT, LANDSCAPE ARCHITECT, OR LAND SURVEYOR, TO ALTER AN ITEM IN ANY WAY. IF AN ITEM BEARING THE STAMP OF A LICENSED PROFESSIONAL IS ALTERED, THE ALTERING ENGINEER, ARCHITECT, LANDSCAPE ARCHITECT, OR LAND SURVEYOR SHALL STAMP THE DOCUMENT AND INCLUDE THE NOTATION "ALTERED BY" FOLLOWED BY THEIR SIGNATURE, THE DATE OF SUCH ALTERATION, AND A SPECIFIC DESCRIPTION OF THE ALTERATION.

REVISIONS

DATE	DESCRIPTION	BY	SYM.

NEW YORK STATE | Thruway Authority

AECOM

TITLE OF PROJECT
SUPERSTRUCTURE REPLACEMENT
GSP CONNECTOR OVER NYS THRUWAY

LOCATION OF PROJECT
BIN 5514049 (MP 23.53)

TITLE OF DRAWING
PIER 1
REINFORCEMENT DETAILS

CONTRACT NUMBER: TANY 26-23B

DATE: JULY 2026

DRAWING NUMBER: ST-23

AICE | CHECKED BY: | IW / MR / VZ | DRAFTED BY: | AICE | CHECKED BY: | IW / MR / VZ | DESIGNED BY: | RWL | DESIGN SUPERVISOR:

CONCRETE REPAIR TABLE	
AREA #	ITEM 582.0052
1	0.83' X 1.3'
2	0.5' X 2'
3	2' X 1'
4	5' X 5'
5	3.2' X 2.8'
6	2' X 5'
7	1' X 7'
8	0.7' X 1'
9	2' X 0.5'
10	1' X 3.5'
11	1' X 5'
12	2' X 2'
13	1' X 6.5'
14	2' X 2'
TOTAL THIS SHEET	79.7 SF

LEGEND

ITEM 582.0052 - REMOVAL AND REPLACEMENT OF STRUCTURAL CONCRETE

ITEM 580.01 - REMOVAL OF STRUCTURAL CONCRETE

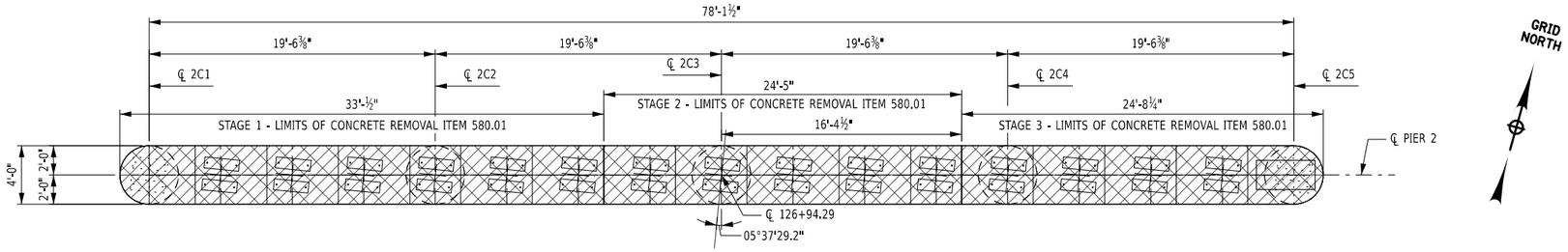

PIER CAP TOP PLAN

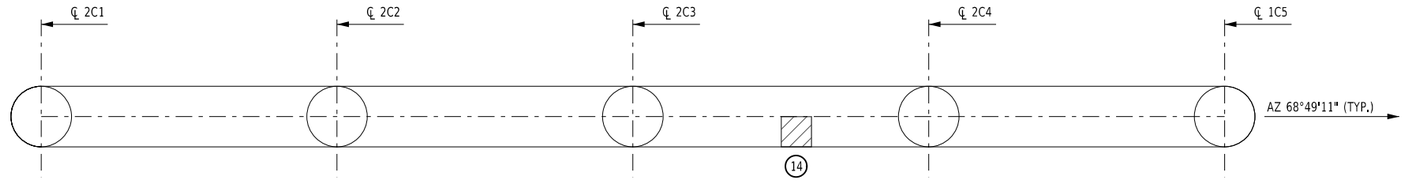

PIER CAP BOTTOM PLAN

CONCRETE REMOVAL TABLE	
LOCATION	ITEM 580.01
STAGE 1	3.5
STAGE 2	2.1
STAGE 3	1.5
TOTAL THIS SHEET	7.1 CY

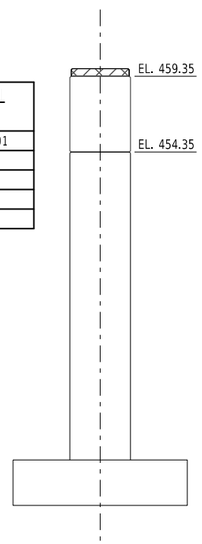

RIGHT ELEVATION

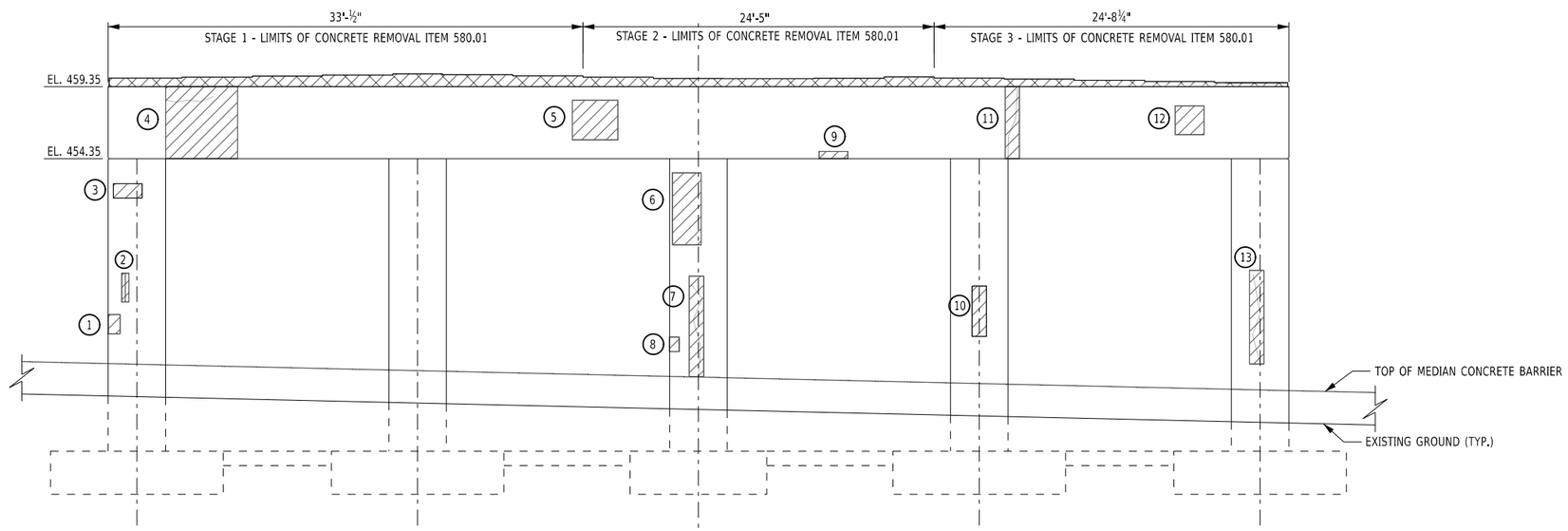

SOUTH ELEVATION (BEGIN)
(LOOKING UPSTATION)

5 0 5 10 15 20'
1" = 10'

NOTES:

NOT ALL DIMENSIONS SHOWN FOR CLARITY, SEE AS-BUILT FOR DIMENSIONS.

CONTRACTOR SHALL VERIFY EXISTING ELEVATIONS AND DIMENSIONS PRIOR TO COMMENCING WORK.

FOR CONCRETE REPAIR DETAILS, SEE DWG. ST-32.

ALTERED ON:

AFFIXED ON: 08/10/2026

SIGNATURE:
STAMP:

SIGNATURE:
STAMP:

STATE OF NEW YORK
EDWIN TWISS
080650
LICENSED PROFESSIONAL ENGINEER

IT IS A VIOLATION OF LAW FOR ANY PERSON, UNLESS THEY ARE ACTING UNDER THE DIRECTION OF A LICENSED PROFESSIONAL ENGINEER, ARCHITECT, LANDSCAPE ARCHITECT, OR LAND SURVEYOR, TO ALTER AN ITEM IN ANY WAY. IF AN ITEM BEARING THE STAMP OF A LICENSED PROFESSIONAL IS ALTERED, THE ALTERING ENGINEER, ARCHITECT, LANDSCAPE ARCHITECT, OR LAND SURVEYOR SHALL STAMP THE DOCUMENT AND INCLUDE THE NOTATION "ALTERED BY" FOLLOWED BY THEIR SIGNATURE, THE DATE OF SUCH ALTERATION, AND A SPECIFIC DESCRIPTION OF THE ALTERATION.

REVISIONS

DATE	DESCRIPTION	BY	SYM.

NEW YORK STATE | Thruway Authority

AECOM

TITLE OF PROJECT
SUPERSTRUCTURE REPLACEMENT
GSP CONNECTOR OVER NYS THRUWAY

LOCATION OF PROJECT
BIN 5514049 (MP 23.53)

TITLE OF DRAWING
PIER 2
REPAIR PLAN & ELEVATION
(1 OF 2)

CONTRACT NUMBER: TANY 26-23B

DATE: JULY 2026

DRAWING NUMBER: ST-24

DESIGN SUPERVISOR: RWL | DESIGNED BY: IW / MR / VZ | CHECKED BY: AICE | DRAFTED BY: IW / MR / VZ | CHECKED BY: AICE

CONCRETE REPAIR TABLE	
AREA #	ITEM 582.0052
1	1' X 12'
2	1' X 0.5'
3	4' X 6'
4	1' X 0.5'
5	3' X 1'
6	1' X 1'
TOTAL THIS SHEET	41.0 SF

LEGEND

ITEM 582.0052 - REMOVAL AND REPLACEMENT OF STRUCTURAL CONCRETE

ITEM 580.01 - REMOVAL OF STRUCTURAL CONCRETE

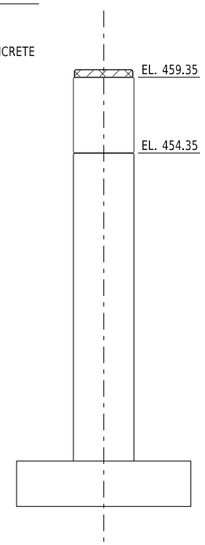

LEFT ELEVATION

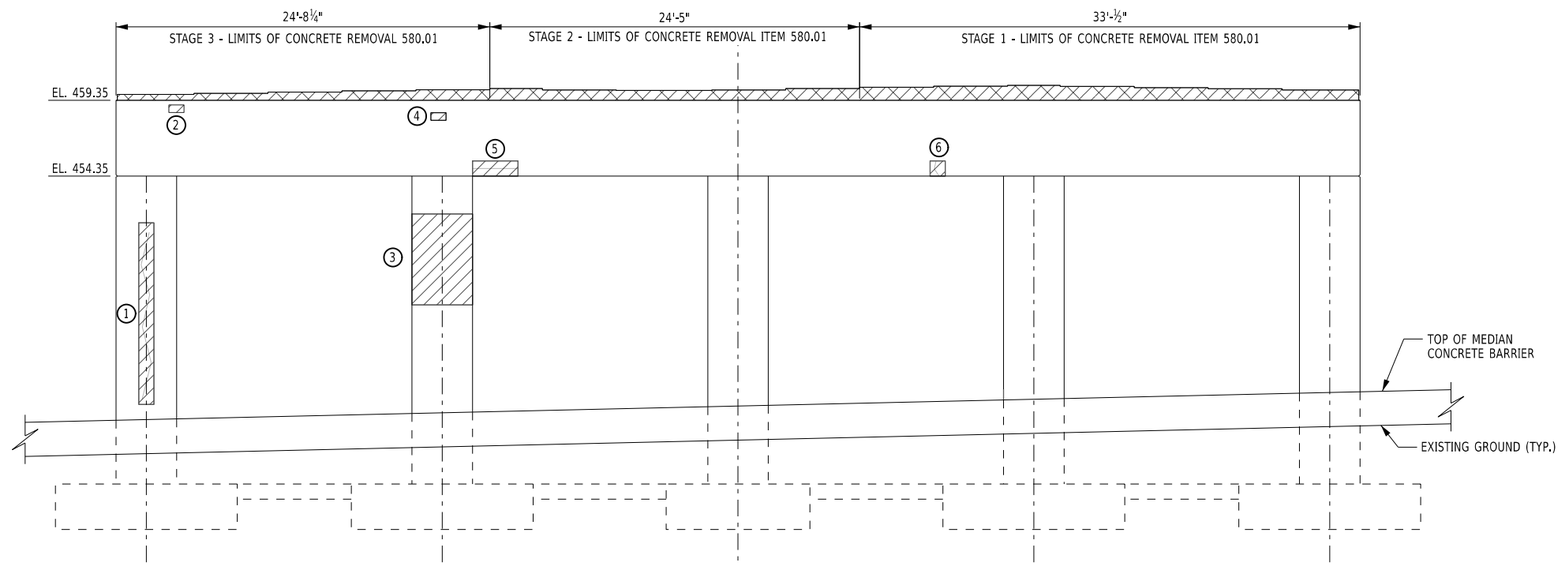

NORTH ELEVATION (END)
(LOOKING DOWNSTATION)

NOTES:

NOT ALL DIMENSIONS SHOWN FOR CLARITY, SEE AS-BUILT FOR DIMENSIONS.

CONTRACTOR SHALL VERIFY EXISTING ELEVATIONS AND DIMENSIONS PRIOR TO COMMENCING WORK.

FOR CONCRETE REPAIR DETAILS, SEE DWG. ST-32.

ALTERED ON:

AFFIXED ON: 08/10/2026

SIGNATURE:
STAMP:

SIGNATURE:
STAMP:

5 0 5 10 15 20'

1" = 10'

IT IS A VIOLATION OF LAW FOR ANY PERSON, UNLESS THEY ARE ACTING UNDER THE DIRECTION OF A LICENSED PROFESSIONAL ENGINEER, ARCHITECT, LANDSCAPE ARCHITECT, OR LAND SURVEYOR, TO ALTER AN ITEM IN ANY WAY. IF AN ITEM BEARING THE STAMP OF A LICENSED PROFESSIONAL IS ALTERED, THE ALTERING ENGINEER, ARCHITECT, LANDSCAPE ARCHITECT, OR LAND SURVEYOR SHALL STAMP THE DOCUMENT AND INCLUDE THE NOTATION "ALTERED BY" FOLLOWED BY THEIR SIGNATURE, THE DATE OF SUCH ALTERATION, AND A SPECIFIC DESCRIPTION OF THE ALTERATION.

REVISIONS

DATE	DESCRIPTION	BY	SYM.

NEW YORK STATE | Thruway Authority

AECOM

TITLE OF PROJECT
SUPERSTRUCTURE REPLACEMENT
GSP CONNECTOR OVER NYS THRUWAY

LOCATION OF PROJECT
BIN 5514049 (MP 23.53)

TITLE OF DRAWING
PIER 2
REPAIR PLAN & ELEVATION
(2 OF 2)

CONTRACT NUMBER: TANY 26-23B

DATE: JULY 2026

DRAWING NUMBER: ST-25

DESIGN SUPERVISOR: RWL
DESIGNED BY: IW / MR / VZ
CHECKED BY: IW / MR / VZ
DRAFTED BY: AICE
CHECKED BY: AICE

CONCRETE TABLE		
LOCATION	ITEM 555.0021	ITEM 559.02
STAGE 1	3.4	227
STAGE 2	2.5	180
STAGE 3	2.3	173
TOTAL THIS SHEET	8.2 CY	580 SF

LEGEND

ITEM 555.0021 - CONCRETE FOR STRUCTURES, PERFORMANCE

ITEM 582.0052 - REMOVAL AND REPLACEMENT OF STRUCTURAL CONCRETE

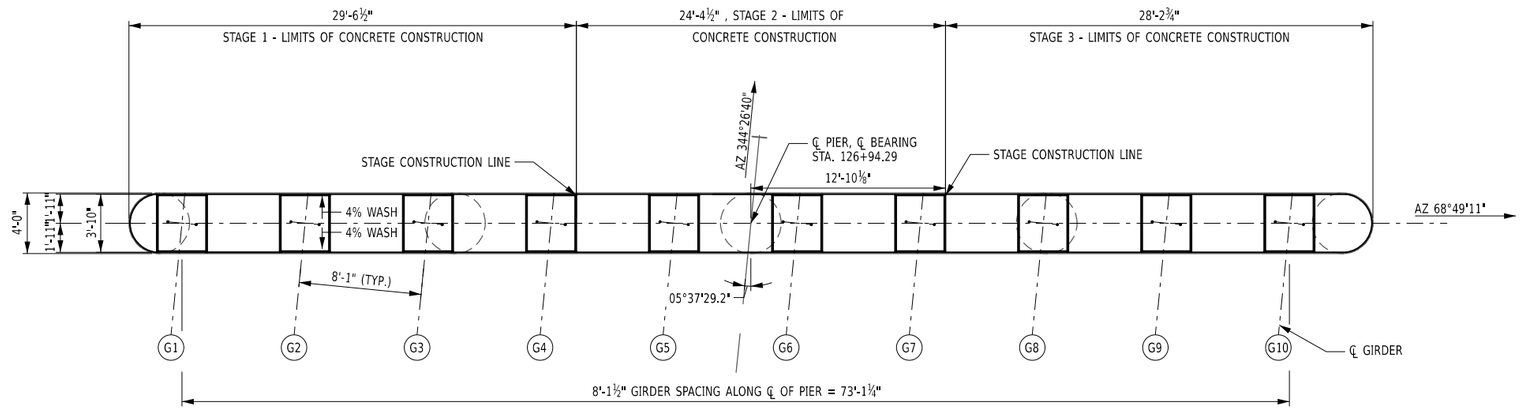

PIER CAP PLAN

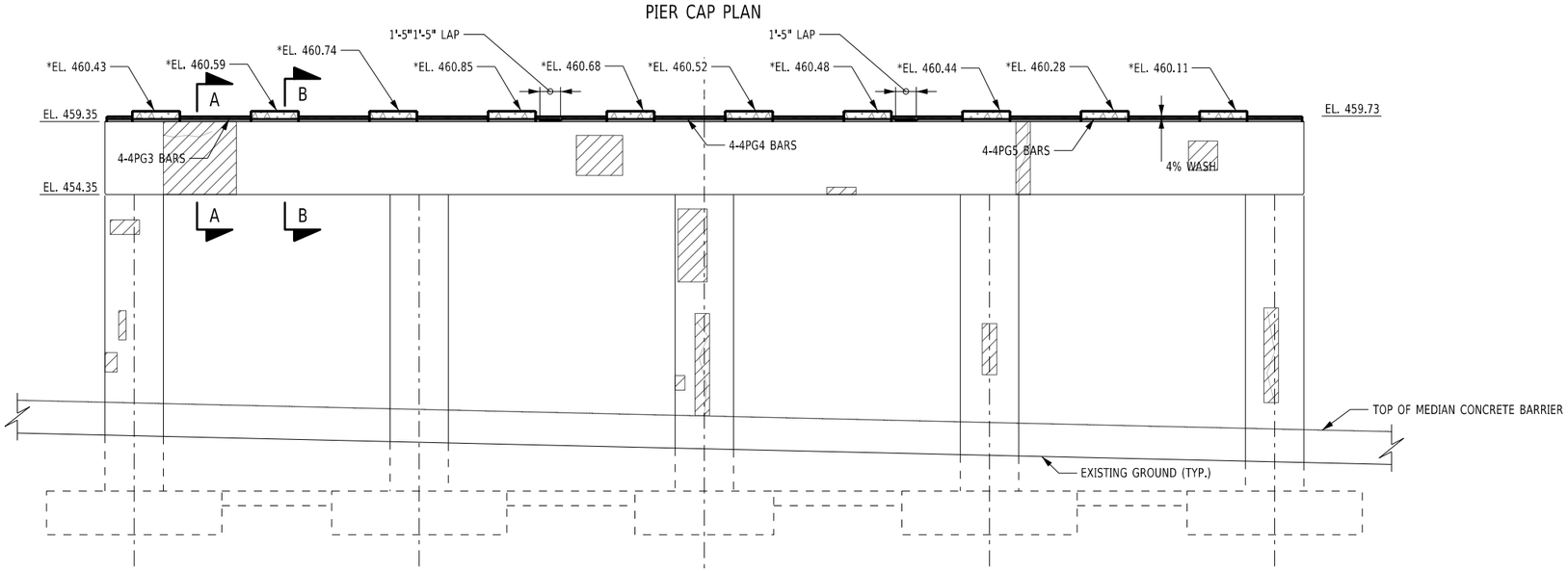

SOUTH ELEVATION (BEGIN)
(LOOKING UPSTATION)

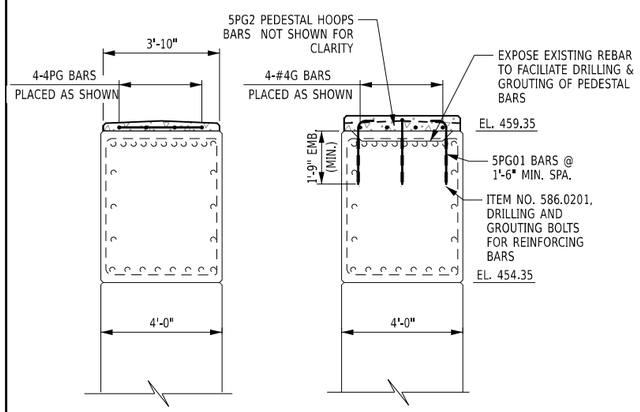

SECTION A-A
NOT TO SCALE

SECTION B-B
NOT TO SCALE

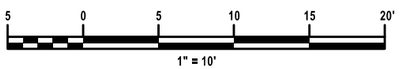

NOTES:

ALL NEWLY PLACED AND EXISTING EXPOSED CONCRETE ON PEDESTALS, PIER CAPS, AND PIER COLUMNS SHALL BE SEALED.

CONCRETE PLACED UNDER ITEM 555.0021 SHALL BE SEALED WITH ITEM 559.02. ALL REPAIRED CONCRETE UNDER ITEM 582.0052 AND EXISTING EXPOSED CONCRETE SHALL BE SEALED UNDER ITEM 559.04.

UNLESS NOTED OTHERWISE, ALL CONCRETE EDGES TO HAVE 1" CHAMFER.

FOR ANCHOR LAYOUT, PEDESTAL LAYOUT & REINFORCEMENT, SEE ST-30.

* ELEVATIONS TO BE ADJUSTED IF PLATE GIRDER OPTION IS USED.

ALTERED ON:

AFFIXED ON: 08/10/2026

SIGNATURE:
STAMP:

SIGNATURE:
STAMP:

IT IS A VIOLATION OF LAW FOR ANY PERSON, UNLESS THEY ARE ACTING UNDER THE DIRECTION OF A LICENSED PROFESSIONAL ENGINEER, ARCHITECT, LANDSCAPE ARCHITECT, OR LAND SURVEYOR, TO ALTER AN ITEM IN ANY WAY. IF AN ITEM BEARING THE STAMP OF A LICENSED PROFESSIONAL IS ALTERED, THE ALTERING ENGINEER, ARCHITECT, LANDSCAPE ARCHITECT, OR LAND SURVEYOR SHALL STAMP THE DOCUMENT AND INCLUDE THE NOTATION "ALTERED BY" FOLLOWED BY THEIR SIGNATURE, THE DATE OF SUCH ALTERATION, AND A SPECIFIC DESCRIPTION OF THE ALTERATION.

REVISIONS

DATE	DESCRIPTION	BY	SYM.

NEW YORK STATE | Thruway Authority

AECOM

TITLE OF PROJECT
SUPERSTRUCTURE REPLACEMENT
GSP CONNECTOR OVER NYS THRUWAY

LOCATION OF PROJECT
BIN 5514049 (MP 23.53)

TITLE OF DRAWING
PIER 2
REINFORCEMENT DETAILS

CONTRACT NUMBER: TANY 26-23B

DATE: JULY 2026

DRAWING NUMBER: ST-26

DESIGN SUPERVISOR: RWL
DESIGNED BY: IW / MR / VZ
DRAFTED BY: AICE
CHECKED BY: IW / MR / VZ
CHECKED BY: AICE

CONCRETE REPAIR TABLE	
AREA #	ITEM 582.0052
1	0.5' X 3.5'
2	3' X 3'
3	2' X 1.5'
4	1' X 0.5'
5	1' X 0.5'
6	1' X 1'
7	3' X 3'
8	1' X 1'
9	2' X 1.5'
10	0.7' X 0.7'
11	6' X 2'
12	6' X 2'
13	1' X 1'
TOTAL THIS SHEET	54.2 SF

LEGEND

ITEM 582.0052 - REMOVAL AND REPLACEMENT OF STRUCTURAL CONCRETE

ITEM 580.01 - REMOVAL OF STRUCTURAL CONCRETE

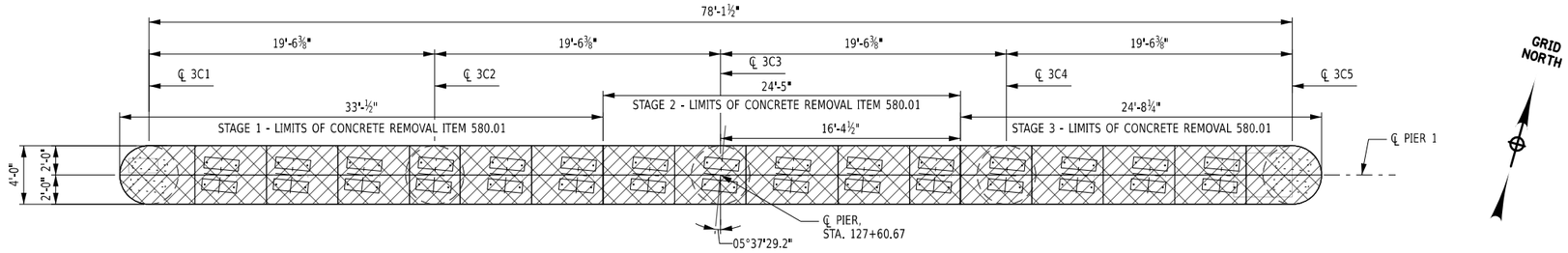

PIER CAP TOP PLAN

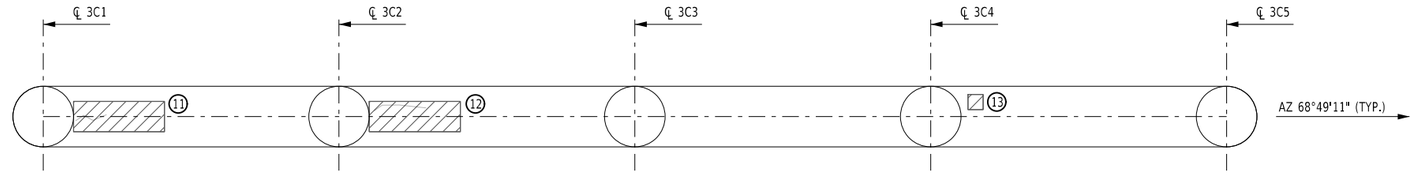

PIER CAP BOTTOM PLAN

CONCRETE REMOVAL TABLE	
LOCATION	ITEM 580.01
STAGE 1	3.5
STAGE 2	2.1
STAGE 3	1.5
TOTAL THIS SHEET	7.1 CY

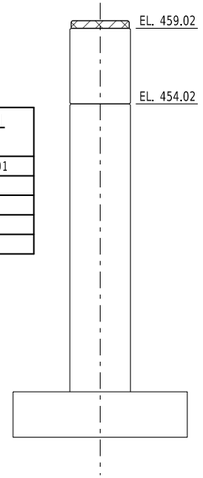

RIGHT ELEVATION

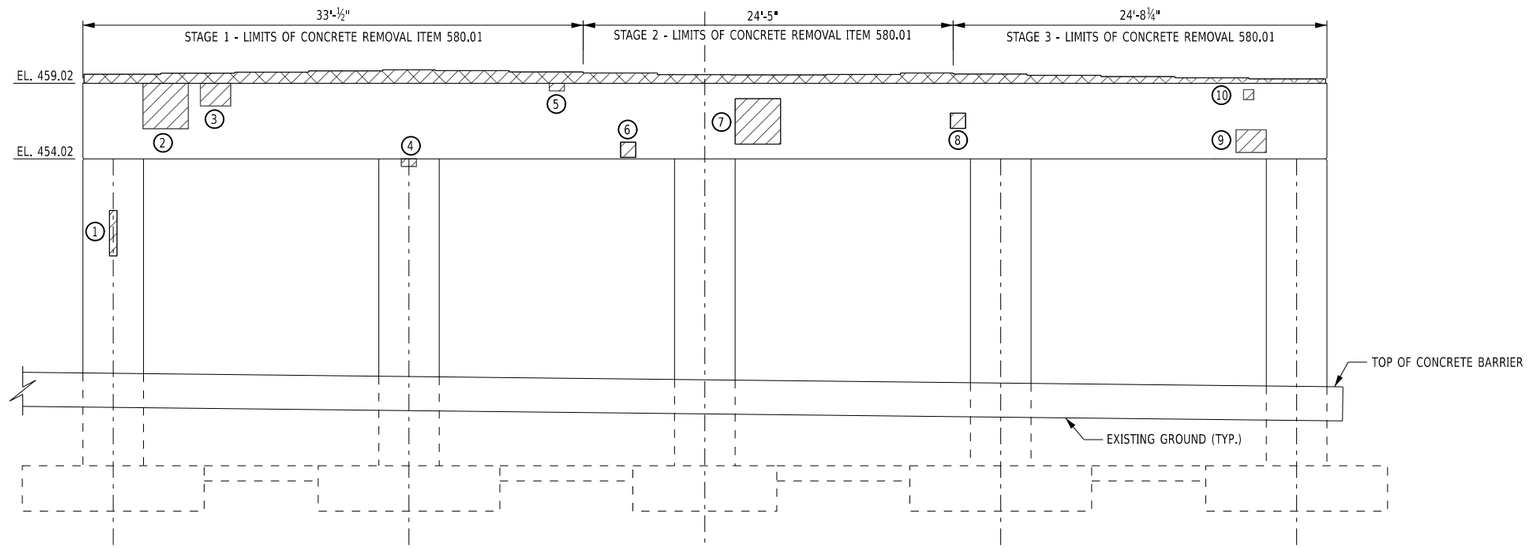

SOUTH ELEVATION (BEGIN)
(LOOKING UPSTATION)

GRID NORTH

5 0 5 10 15 20'
1" = 10'

NOTES:

NOT ALL DIMENSIONS SHOWN FOR CLARITY, SEE AS-BUILT FOR DIMENSIONS.

CONTRACTOR SHALL VERIFY EXISTING ELEVATIONS AND DIMENSIONS PRIOR TO COMMENCING WORK.

FOR CONCRETE REPAIR DETAILS, SEE DWG. ST-32.

ALTERED ON:

AFFIXED ON: 08/10/2026

SIGNATURE:
STAMP:

SIGNATURE:
STAMP:

STATE OF NEW YORK
EDWIN TWISS
080650
LICENSED PROFESSIONAL ENGINEER

IT IS A VIOLATION OF LAW FOR ANY PERSON, UNLESS THEY ARE ACTING UNDER THE DIRECTION OF A LICENSED PROFESSIONAL ENGINEER, ARCHITECT, LANDSCAPE ARCHITECT, OR LAND SURVEYOR, TO ALTER AN ITEM IN ANY WAY. IF AN ITEM BEARING THE STAMP OF A LICENSED PROFESSIONAL IS ALTERED, THE ALTERING ENGINEER, ARCHITECT, LANDSCAPE ARCHITECT, OR LAND SURVEYOR SHALL STAMP THE DOCUMENT AND INCLUDE THE NOTATION "ALTERED BY" FOLLOWED BY THEIR SIGNATURE, THE DATE OF SUCH ALTERATION, AND A SPECIFIC DESCRIPTION OF THE ALTERATION.

REVISIONS

DATE	DESCRIPTION	BY	SYM.

NEW YORK STATE | Thruway Authority

AECOM

TITLE OF PROJECT
SUPERSTRUCTURE REPLACEMENT
GSP CONNECTOR OVER NYS THRUWAY

LOCATION OF PROJECT
BIN 5514049 (MP 23.53)

TITLE OF DRAWING
PIER 3
REPAIR PLAN & ELEVATION
(1 OF 2)

CONTRACT NUMBER: TANY 26-23B

DATE: JULY 2026

DRAWING NUMBER: ST-27

DESIGN SUPERVISOR: RWL
DESIGNED BY: IW / MR / VZ
CHECKED BY: IW / MR / VZ
DRAFTED BY: AICE
CHECKED BY: AICE

CONCRETE REPAIR TABLE	
AREA #	ITEM 582.0052
1	3' X 0.5'
2	0.5' X 5'
TOTAL THIS SHEET	4.0 SF

LEGEND

ITEM 582.0052 - REMOVAL OF REPLACEMENT OF SRUCTURAL CONCRETE

ITEM 580.01 - REMOVAL OF STRUCTURAL CONCRETE

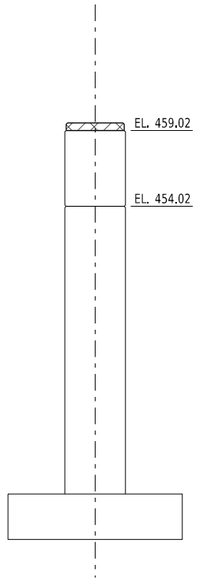

LEFT ELEVATION

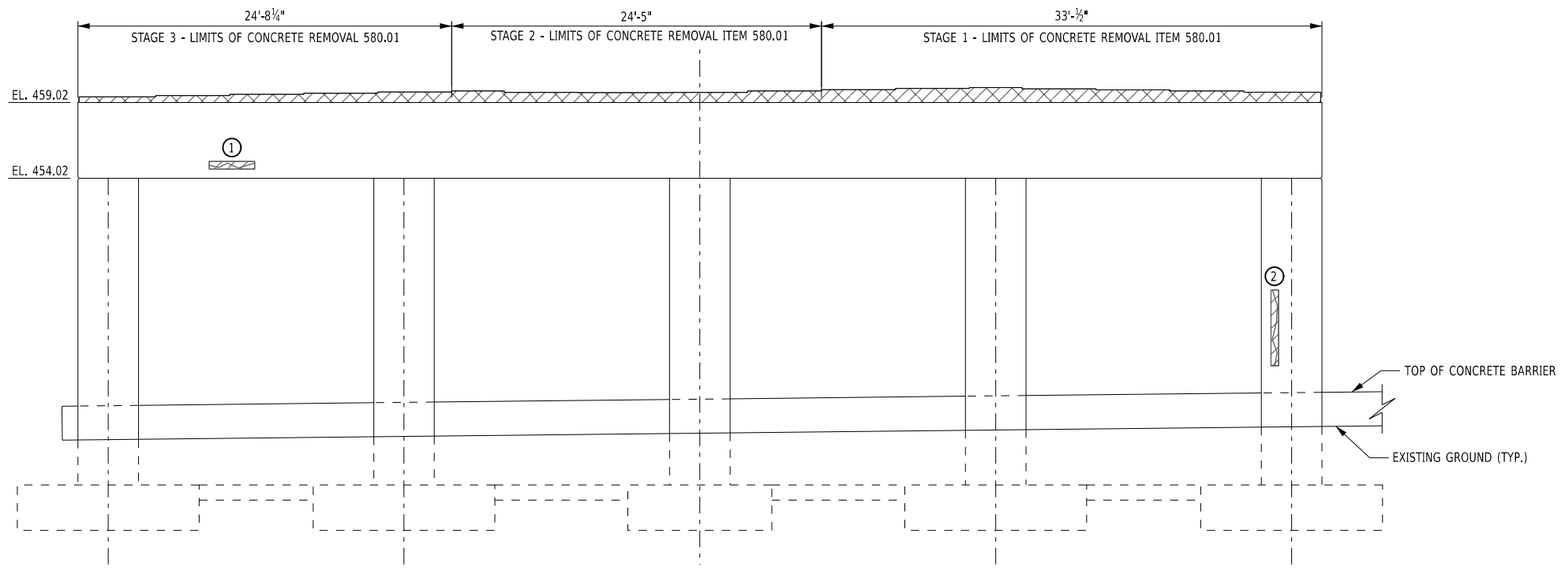

NORTH ELEVATION (END)
(LOOKING DOWNSTATION)

NOTES:

NOT ALL DIMENSIONS SHOWN FOR CLARITY, SEE AS-BUILT FOR DIMENSIONS.

CONTRACTOR SHALL VERIFY EXISTING ELEVATIONS AND DIMENSIONS PRIOR TO COMMENCING WORK.

FOR CONCRETE REPAIR DETAILS, SEE DWG. ST-32.

ALTERED ON:	AFFIXED ON: 08/10/2026
SIGNATURE: STAMP:	SIGNATURE: STAMP:

IT IS A VIOLATION OF LAW FOR ANY PERSON, UNLESS THEY ARE ACTING UNDER THE DIRECTION OF A LICENSED PROFESSIONAL ENGINEER, ARCHITECT, LANDSCAPE ARCHITECT, OR LAND SURVEYOR, TO ALTER AN ITEM IN ANY WAY. IF AN ITEM BEARING THE STAMP OF A LICENSED PROFESSIONAL IS ALTERED, THE ALTERING ENGINEER, ARCHITECT, LANDSCAPE ARCHITECT, OR LAND SURVEYOR SHALL STAMP THE DOCUMENT AND INCLUDE THE NOTATION "ALTERED BY" FOLLOWED BY THEIR SIGNATURE, THE DATE OF SUCH ALTERATION, AND A SPECIFIC DESCRIPTION OF THE ALTERATION.

REVISIONS

DATE	DESCRIPTION	BY	SYM.

NEW YORK STATE | Thruway Authority

AECOM

TITLE OF PROJECT
SUPERSTRUCTURE REPLACEMENT
GSP CONNECTOR OVER NYS THRUWAY

LOCATION OF PROJECT
BIN 5514049 (MP 23.53)

TITLE OF DRAWING
PIER 3
REPAIR PLAN & ELEVATION
(2 OF 2)

CONTRACT NUMBER: TANY 26-23B

DATE: JULY 2026

DRAWING NUMBER: ST-28

DESIGN SUPERVISOR: RWL
DESIGNED BY: IW / MR / VZ
CHECKED BY: IW / MR / VZ
DRAFTED BY: AICE
CHECKED BY: AICE

CONCRETE TABLE		
LOCATION	ITEM 555.0021	ITEM 559.02
STAGE 1	3.4	197
STAGE 2	2.5	180
STAGE 3	2.3	173
TOTAL THIS SHEET	8.2 CY	550 SF

LEGEND

ITEM 555.0021 - CONCRETE FOR STRUCTURES, PERFORMANCE

ITEM 582.0052 - REMOVAL AND REPLACEMENT OF STRUCTURAL CONCRETE

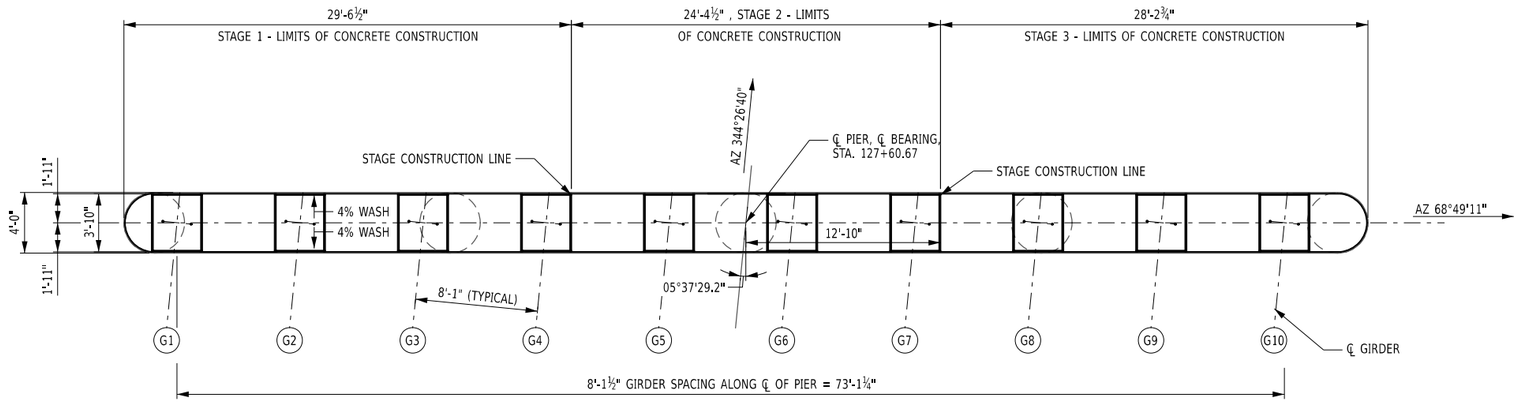

PIER CAP PLAN

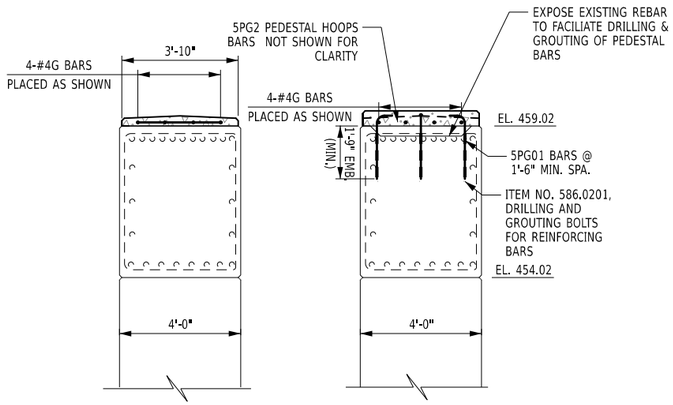

SECTION A-A
NOT TO SCALE

SECTION B-B
NOT TO SCALE

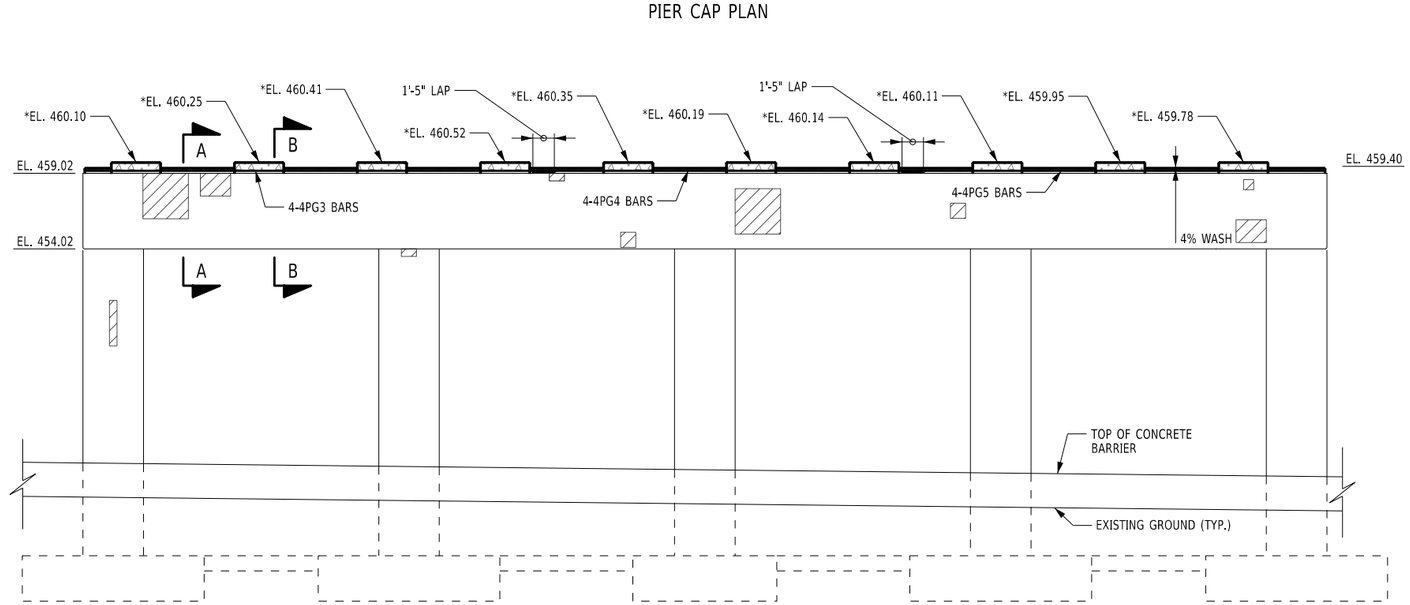

SOUTH ELEVATION (BEGIN)
(LOOKING UPSTATION)

NOTES:

ALL NEWLY PLACED AND EXISTING EXPOSED CONCRETE ON PEDESTALS, PIER CAPS, AND PIER COLUMNS SHALL BE SEALED.

CONCRETE PLACED UNDER ITEM 555.0021 SHALL BE SEALED WITH ITEM 559.02. ALL REPAIRED CONCRETE UNDER ITEM 582.0052 AND EXISTING EXPOSED CONCRETE SHALL BE SEALED UNDER ITEM 559.04.

UNLESS NOTED OTHERWISE, ALL CONCRETE EDGES TO HAVE 1" CHAMFER.

FOR ANCHOR LAYOUT, PEDESTAL LAYOUT & REINFORCEMENT, SEE ST-30.

* ELEVATIONS TO BE ADJUSTED IF PLATE GIRDER OPTION IS USED.

5 0 5 10 15 20'
1" = 10'

ALTERED ON:

AFFIXED ON: 08/10/2026

SIGNATURE:
STAMP:

SIGNATURE:
STAMP:

STATE OF NEW YORK
EDWIN TWISS
080650
LICENSED PROFESSIONAL ENGINEER

IT IS A VIOLATION OF LAW FOR ANY PERSON, UNLESS THEY ARE ACTING UNDER THE DIRECTION OF A LICENSED PROFESSIONAL ENGINEER, ARCHITECT, LANDSCAPE ARCHITECT, OR LAND SURVEYOR, TO ALTER AN ITEM IN ANY WAY. IF AN ITEM BEARING THE STAMP OF A LICENSED PROFESSIONAL IS ALTERED, THE ALTERING ENGINEER, ARCHITECT, LANDSCAPE ARCHITECT, OR LAND SURVEYOR SHALL STAMP THE DOCUMENT AND INCLUDE THE NOTATION "ALTERED BY" FOLLOWED BY THEIR SIGNATURE, THE DATE OF SUCH ALTERATION, AND A SPECIFIC DESCRIPTION OF THE ALTERATION.

REVISIONS

DATE	DESCRIPTION	BY	SYM.

NEW YORK STATE | Thruway Authority

AECOM

TITLE OF PROJECT
SUPERSTRUCTURE REPLACEMENT
GSP CONNECTOR OVER NYS THRUWAY

LOCATION OF PROJECT
BIN 5514049 (MP 23.53)

TITLE OF DRAWING
PIER 3
REINFORCEMENT DETAILS

CONTRACT NUMBER:
TANY 26-23B

DATE:
JULY 2026

DRAWING NUMBER:
ST-29

AICE
CHECKED BY:
IW / MR / VZ
DRAFTED BY:
AICE
CHECKED BY:
IW / MR / VZ
DESIGNED BY:
RWL
DESIGN SUPERVISOR:

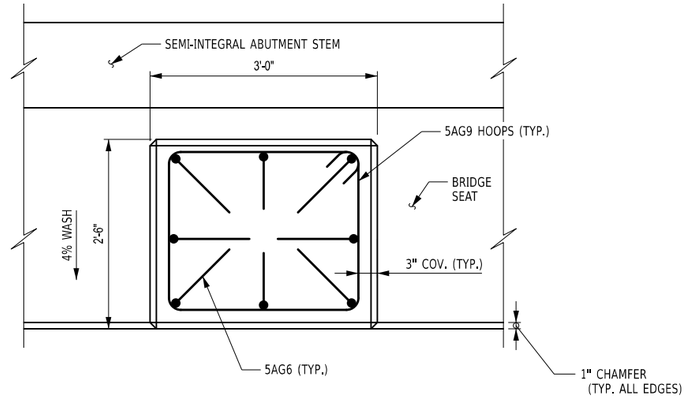

TYPICAL ABUTMENT PEDESTAL PLAN

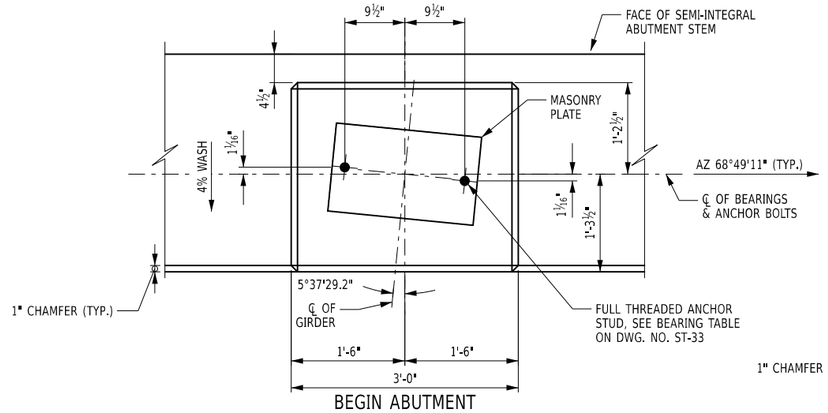

BEGIN ABUTMENT
ANCHOR BOLT LAYOUT

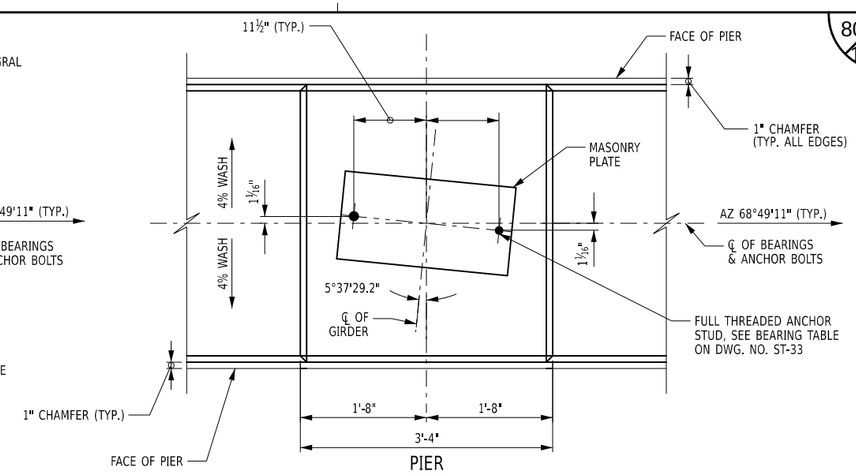

PIER
ANCHOR BOLT LAYOUT

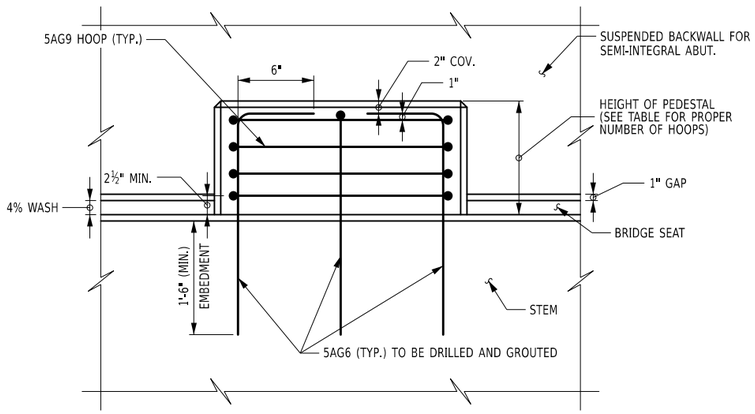

TYPICAL PEDESTAL ELEVATION

ABUTMENT PEDESTAL DETAILS

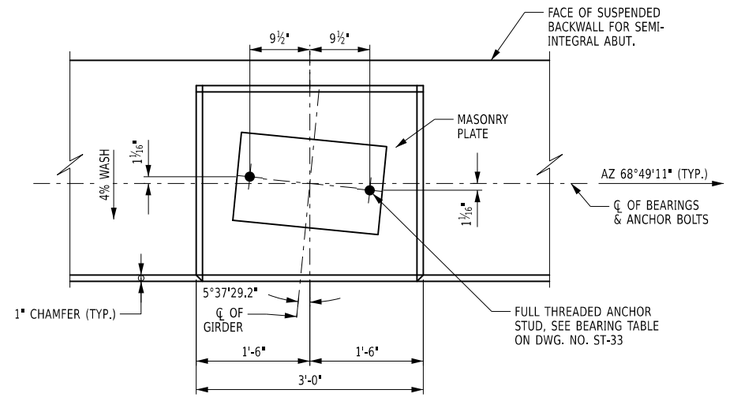

END ABUTMENT
ANCHOR BOLT LAYOUT

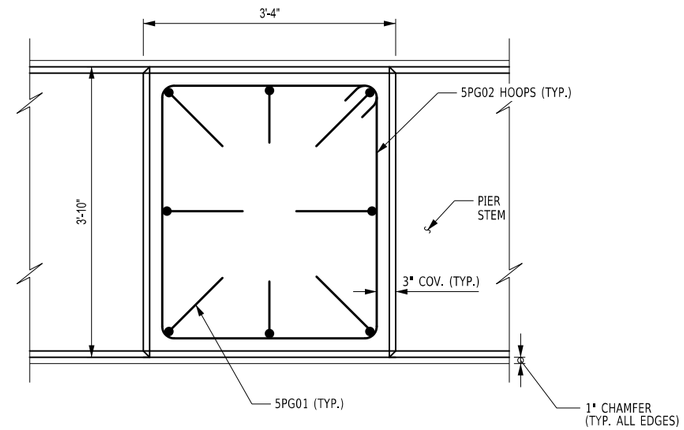

TYPICAL PIER PEDESTAL PLAN

PEDESTAL HEIGHT	NUMBER OF HOOPS
6" TO 8"	1
8" TO 11"	2
11" TO 14"	3
14" TO 17"	4
17" TO 20"	5

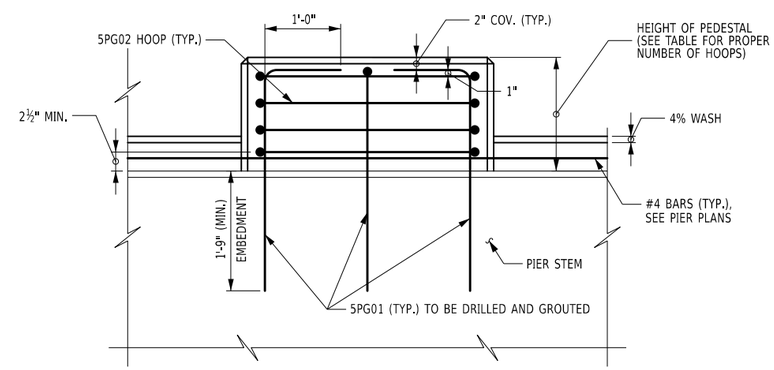

TYPICAL PEDESTAL ELEVATION

PIER PEDESTAL DETAILS

AICE | CHECKED BY: | IW / MR / VZ | DRAFTED BY: | AICE | CHECKED BY: | IW / MR / VZ | DESIGNED BY: | RWL | DESIGN SUPERVISOR:

ALTERED ON:	AFFIXED ON: 08/10/2026
SIGNATURE: STAMP:	SIGNATURE: STAMP: STATE OF NEW YORK · EDWIN TWISS · 080650 · LICENSED PROFESSIONAL ENGINEER

IT IS A VIOLATION OF LAW FOR ANY PERSON, UNLESS THEY ARE ACTING UNDER THE DIRECTION OF A LICENSED PROFESSIONAL ENGINEER, ARCHITECT, LANDSCAPE ARCHITECT, OR LAND SURVEYOR, TO ALTER AN ITEM IN ANY WAY. IF AN ITEM BEARING THE STAMP OF A LICENSED PROFESSIONAL IS ALTERED, THE ALTERING ENGINEER, ARCHITECT, LANDSCAPE ARCHITECT, OR LAND SURVEYOR SHALL STAMP THE DOCUMENT AND INCLUDE THE NOTATION "ALTERED BY" FOLLOWED BY THEIR SIGNATURE, THE DATE OF SUCH ALTERATION, AND A SPECIFIC DESCRIPTION OF THE ALTERATION.

REVISIONS

DATE	DESCRIPTION	BY	SYM.

NEW YORK STATE | Thruway Authority

AECOM

TITLE OF PROJECT: SUPERSTRUCTURE REPLACEMENT GSP CONNECTOR OVER NYS THRUWAY

LOCATION OF PROJECT: BIN 5514049 (MP 23.53)

TITLE OF DRAWING: SUBSTRUCTURE MISCELLANEOUS DETAILS (1 OF 2)

CONTRACT NUMBER: TANY 26-23B

DATE: JULY 2026

DRAWING NUMBER: ST-30

SEMI-INTEGRAL ABUTMENT CONSTRUCTION (PROCEDURE B)

1. PLACE CONCRETE STEM COVER REPLACEMENT, PEDESTALS AND WINGWALLS.
2. ERECT GIRDERS AND INSTALL DIAPHRAGMS.
3. PLACE END OF DECK AND BACKWALL CONCRETE IN ACCORDANCE WITH THE DECK POUR SEQUENCE SHOWN ON DWG. NO. ST-46.
4. BACKFILL ABUTMENT BACKWALL. NO BACKFILLING OF THE ABUTMENT BACKWALLS IS ALLOWED UNTIL THEY HAVE CURED FOR 7 DAYS. BACKFILLING SHALL BE CONDUCTED SUCH THAT THE MAXIMUM DIFFERENTIAL IN FILL HEIGHT BETWEEN THE TWO BACKWALLS (AS MEASURED FROM THE BOTTOM OF THE BACKWALL) DOES NOT EXCEED 2'-0". IN ADDITION, THE FILL HEIGHT BEHIND ANY SINGLE ABUTMENT BACKWALL SHALL NOT VARY MORE THAN 2'-0".
5. PLACE CONCRETE FOR APPROACH SLABS.

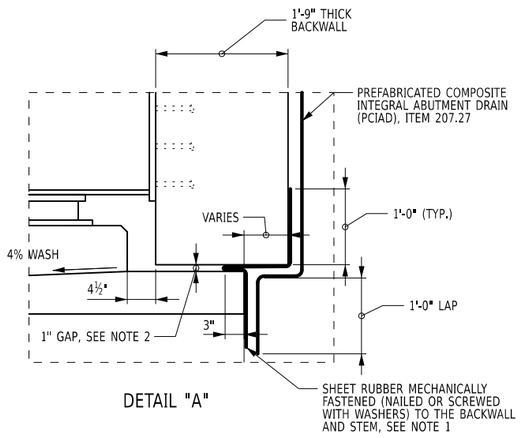

DETAIL "A"

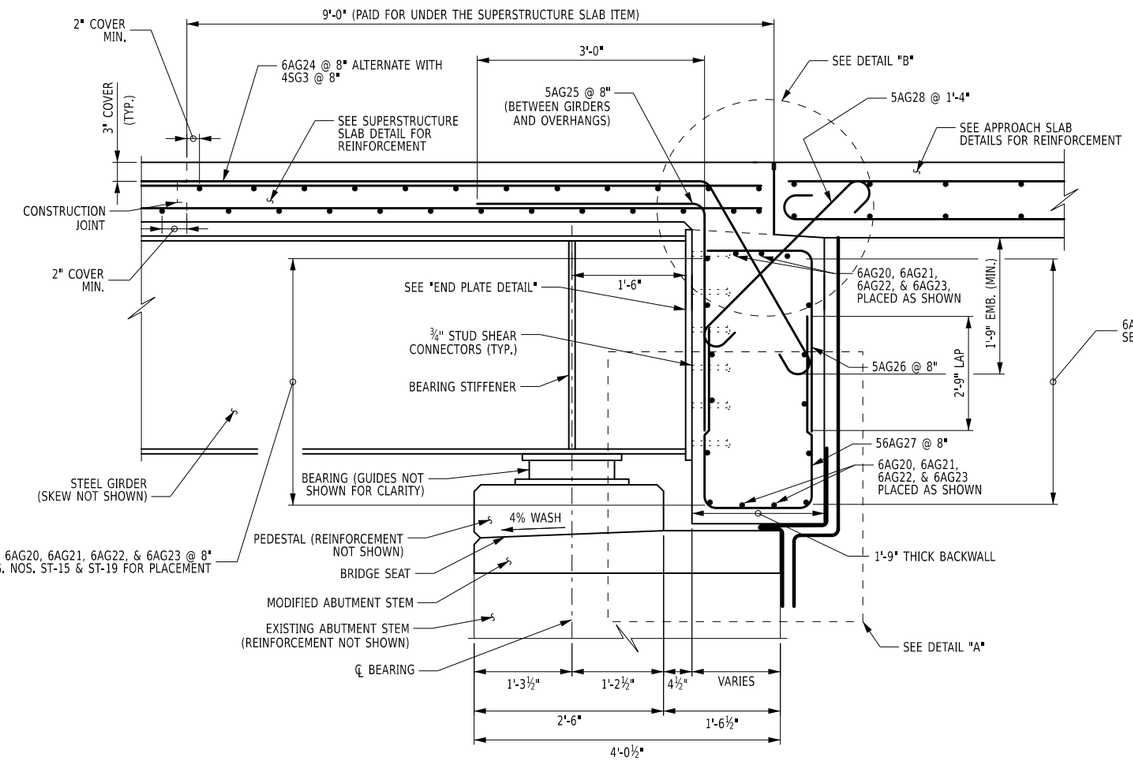

TYPICAL SEMI-INTEGRAL ABUTMENT SECTION

(BEGIN ABUTMENT SHOWN, END ABUTMENT SIMILAR)

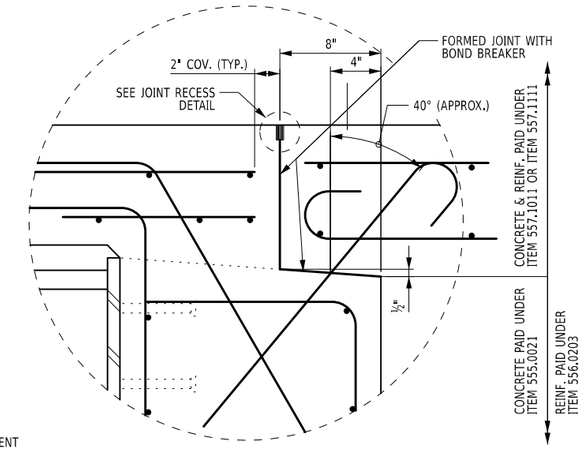

DETAIL "B"

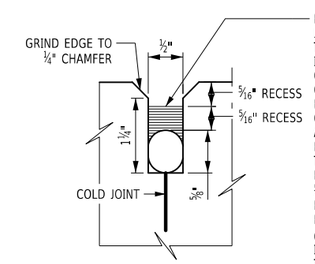

FILL THE RECESS WITH A STRUCTURAL JOINT MATERIAL, SILICONE SEALANT, FROM THE DEPARTMENT'S APPROVED LIST FOR ITEM 567.51000016. IF THE RECESS IS SAW CUT, WATER BLAST IMMEDIATELY FOLLOWING CUTTING TO REMOVE ANY RESIDUAL SLURRY BEFORE IT DRIES. CLEAN THE VERTICAL FACES OF THE RECESS BY ABRASIVE BLAST, AND AIR BLOW THE RESIDUE FROM THE RECESS. PRIME THE VERTICAL FACES WITH THE MANUFACTURER'S RECOMMENDED PRIMER, AND ALLOW TO DRY. PLACE A ⅝" DIA. SOFT CLOSED CELL BACKER ROD IN THE BOTTOM OF THE RECESS. POUR THE SILICONE SEALANT TO A DEPTH OF APPROX. 5/16". PAYMENT TO BE INCLUDED IN THE UNIT PRICE BID FOR THE APPROACH SLAB.

JOINT RECESS DETAIL

NOTES:

EXISTING VERTICAL REINFORCEMENT IN THE BACKWALL AS WELL AS THE WINGWALL SHALL BE CUT AND GROUND FLUSH AT THE REMOVAL ELEVATION.

ALL REINFORCEMENT SHALL HAVE 2" COVER UNLESS OTHERWISE SPECIFIED.

FOR APPROACH SLAB DETAILS, SEE DWG. NOS. ST-47 THROUGH ST-49.

FOR PEDESTAL REINFORCEMENT, SEE DWG. NO. ST-30.

FOR END PLATE DETAILS, SEE DWG. NO. ST-39.

NOTES:

1. SHEET RUBBER SHALL BE ⅛" THICK POLYCHLOROPRENE (SOLID, NOT FOAM) WITH A DUROMETER "SHORE A" VALUE OF 60 (± 10), COST TO BE INCLUDED IN THE PRICE BID FOR THE ABUTMENT CONCRETE ITEM.
2. 1" EXPANDED POLYSTYRENE (EPS) FOAM (ASTM C578) WITH A COMPRESSIVE STRENGTH OF 25 PSI MAY BE USED AS A STAY-IN-PLACE FORM TO CREATE THE GAP, COST TO BE INCLUDED IN PRICE BID FOR THE ABUTMENT CONCRETE ITEM.

ALTERED ON:	AFFIXED ON: 08/10/2026
SIGNATURE: STAMP:	SIGNATURE: STAMP: STATE OF NEW YORK · EDWIN TWISS · EXCELSIOR · 080650 · LICENSED PROFESSIONAL ENGINEER

IT IS A VIOLATION OF LAW FOR ANY PERSON, UNLESS THEY ARE ACTING UNDER THE DIRECTION OF A LICENSED PROFESSIONAL ENGINEER, ARCHITECT, LANDSCAPE ARCHITECT, OR LAND SURVEYOR, TO ALTER AN ITEM IN ANY WAY. IF AN ITEM BEARING THE STAMP OF A LICENSED PROFESSIONAL IS ALTERED, THE ALTERING ENGINEER, ARCHITECT, LANDSCAPE ARCHITECT, OR LAND SURVEYOR SHALL STAMP THE DOCUMENT AND INCLUDE THE NOTATION "ALTERED BY" FOLLOWED BY THEIR SIGNATURE, THE DATE OF SUCH ALTERATION, AND A SPECIFIC DESCRIPTION OF THE ALTERATION.

REVISIONS

DATE	DESCRIPTION	BY	SYM.

NEW YORK STATE Thruway Authority

AECOM

TITLE OF PROJECT: SUPERSTRUCTURE REPLACEMENT GSP CONNECTOR OVER NYS THRUWAY

LOCATION OF PROJECT: BIN 5514049 (MP 23.53)

TITLE OF DRAWING: SUBSTRUCTURE MISCELLANEOUS DETAILS (2 OF 2)

CONTRACT NUMBER: TANY 26-23B

DATE: JULY 2026

DRAWING NUMBER: ST-31

AICE | CHECKED BY: | IW / MR / VZ | DRAFTED BY: | AICE | CHECKED BY: | IW / MR / VZ | DESIGNED BY: | RWL | DESIGN SUPERVISOR:

NOTES:

1. THE CONTRACTOR'S ATTENTION IS DIRECTED TO THE FACT THAT SOUND CONCRETE MAY HAVE TO BE REMOVED TO OBTAIN THE MINIMUM 1" CLEARANCE BEHIND THE REINFORCING STEEL.
2. ANY NEW REINFORCEMENT SHALL BE ASTM A615, GRADE 60, HOT-DIPPED GALVANIZED AND SHALL BE INCLUDED IN THE PRICE BID FOR ITEM 556.0203 UNLESS OTHERWISE INDICATED IN THE PLANS.
3. THE CONTRACTOR SHALL ENSURE THAT ALL REINFORCING STEEL IS SECURELY FASTENED TOGETHER WITH TIE WIRE TO PROVIDE GOOD CONTINUITY FOR GALVANIC ANODES AS PER MANUFACTURER'S RECOMMENDATIONS.
4. IN ORDER TO GAIN PROPER CONTINUITY FOR THE GALVANIC ANODES AS PER MANUFACTURER'S RECOMMENDATIONS, THE CONTRACTOR SHALL REMOVE THE EPOXY REINFORCING BAR THAT AN ANODE IS ATTACHED TO IN ORDER FOR THE ANODE ANODE'S TIES TO CONTACT A BARE METAL SURFACE. THE COST SHALL BE INCLUDED IN THE UNIT PRICE BID FOR THE GALVANIC ANODES ITEM.
5. THE CONTRACTOR SHALL PERFORM ALL REMOVALS WITHOUT DAMAGING ANY EXISTING STEEL REINFORCEMENT THAT IS TO REMAIN. ANY DAMAGED REINFORCEMENT SHALL BE REPLACED WITH HOT-DIPPED GALVANIZED REBAR BY THE CONTRACTOR AT NO ADDITIONAL COST TO THE AUTHORITY.
6. THE COST OF SAWCUTS ARE INCLUDED IN THE UNIT PRICE BID FOR THE CONCRETE REPAIR ITEM.
7. GALVANIC ANODES SHALL BE INSTALLED IN ALL REPAIR AREA IN THE PIERS TO BE PAID FOR UNDER ITEM 582.0052.
8. GALVANIC ANODES SHALL BE INSTALLED WHERE NEW REBAR MAKES INCIDENTAL CONTACT WITH THE EXISTING REBAR AOBE.

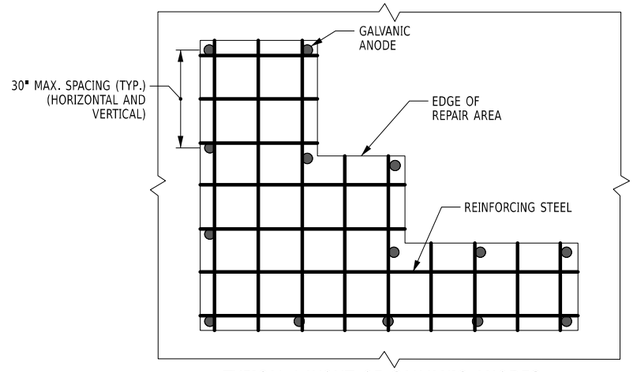

TYPICAL LAYOUT OF GALVANIC ANODES
ITEM 582.99000016
NOT TO SCALE

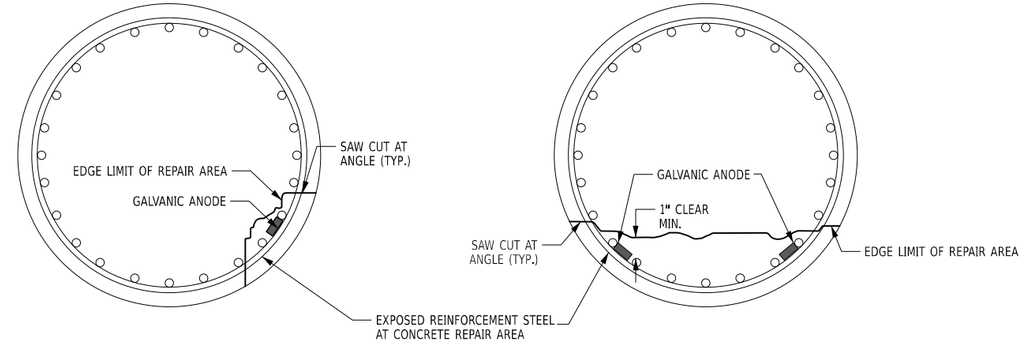

SECTION A-A CORNER & FACE REPAIRS
NOT TO SCALE

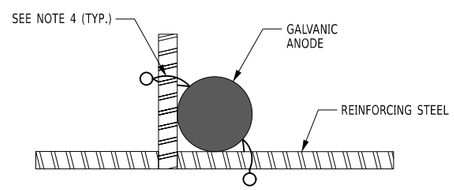

TYPICAL GALVANIC ANODES AT REBAR INTERSECTION
NOT TO SCALE

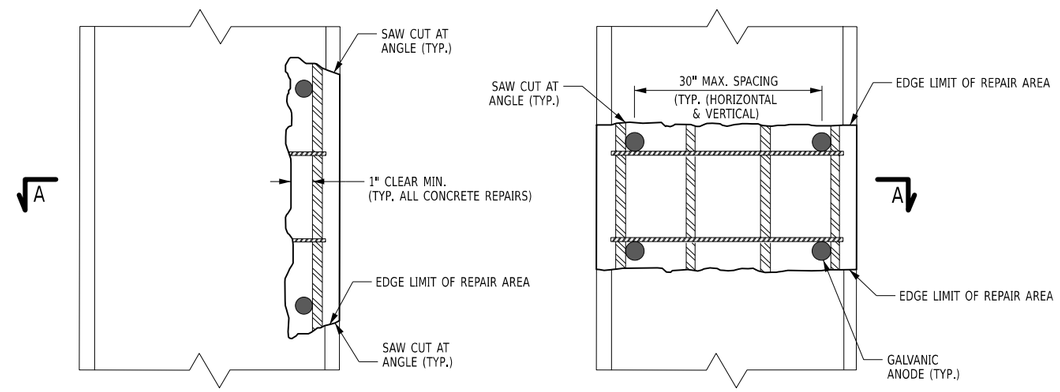

ELEVATION OF CORNER & FACE REPAIRS
NOT TO SCALE

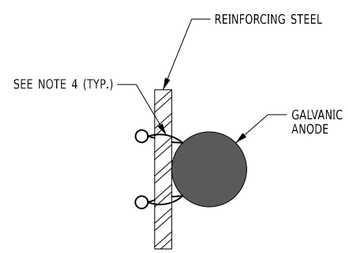

TYPICAL GALVANIC ANODES BESIDE REBAR
NOT TO SCALE

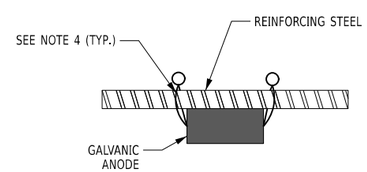

TYPICAL GALVANIC ANODES BELOW REBAR
NOT TO SCALE

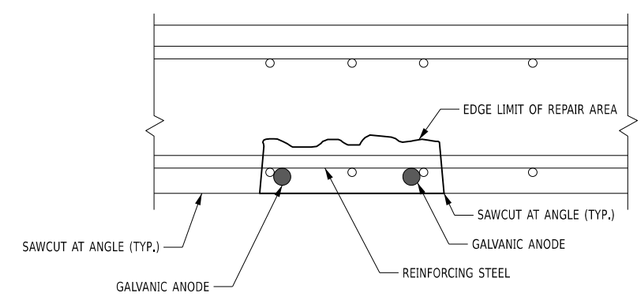

OVERHEAD CONCRETE REPAIR DEAIL
NOT TO SCALE

ALTERED ON:	AFFIXED ON: 08/10/2026
SIGNATURE: STAMP:	SIGNATURE: STAMP: STATE OF NEW YORK · EDWIN TWISS · EXCELSIOR · 080650 · LICENSED PROFESSIONAL ENGINEER

IT IS A VIOLATION OF LAW FOR ANY PERSON, UNLESS THEY ARE ACTING UNDER THE DIRECTION OF A LICENSED PROFESSIONAL ENGINEER, ARCHITECT, LANDSCAPE ARCHITECT, OR LAND SURVEYOR, TO ALTER AN ITEM IN ANY WAY. IF AN ITEM BEARING THE STAMP OF A LICENSED PROFESSIONAL IS ALTERED, THE ALTERING ENGINEER, ARCHITECT, LANDSCAPE ARCHITECT, OR LAND SURVEYOR SHALL STAMP THE DOCUMENT AND INCLUDE THE NOTATION "ALTERED BY" FOLLOWED BY THEIR SIGNATURE, THE DATE OF SUCH ALTERATION, AND A SPECIFIC DESCRIPTION OF THE ALTERATION.

REVISIONS

DATE	DESCRIPTION	BY	SYM.

NEW YORK STATE | Thruway Authority

AECOM

TITLE OF PROJECT: SUPERSTRUCTURE REPLACEMENT GSP CONNECTOR OVER NYS THRUWAY
LOCATION OF PROJECT: BIN 5514049 (MP 23.53)
TITLE OF DRAWING: CONCRETE REPAIR DETAILS

CONTRACT NUMBER: TANY 26-23B
DATE: JULY 2026
DRAWING NUMBER: ST-32

DESIGN SUPERVISOR: RWL | DESIGNED BY: IW / MR / VZ | CHECKED BY: IW / MR / VZ | DRAFTED BY: AICE | CHECKED BY: AICE

EXPANSION ELASTOMERIC BEARING (TYPE E.B.) TABLE

LOCATION	ITEM NO.	QUANTITY REQUIRED	D.L. + S.D.L. (kips)	L.L. WITHOUT IMPACT (kips)	TOTAL DESIGN REACTION (kips)	SHAPE FACTOR	ELATOMER LAYER					hrt	COMP. AREA (SQ. In.)	SHEAR AREA (SQ. In.)	MASONRY PALTE								ANCHOR STUDS		WELD	WASHER PLATE		SOLE PLATE				BRG.
							THK/LAYER	NO. LAYERS	L	W	D				Wm	Lm	Tm	Et	El	Ez	Am	Bm	DIA.	STUDS/BRG.	SIZE	AWp	BWp	Ws	Ls	T1	T2	H
BEG. ABUT.	565.2033	10	72	72	145	6.86	0.5	6	12	16	-	3	185	192	23	14	1	2	7	1.5	2.5	1.375	1	2	5/16	3.5	2.375	17	13	1.5	1.5	6.125
PIER 1	565.2034	10	122	98	220	7.72	0.5	4	13	19	-	2	239	247	27	15	1	2	7.5	1.5	2.5	1.375	1	2	5/16	3.5	2.375	20	14	1.5	1.5	4.875
PIER 2	565.2034	10	99	94	193	7.72	0.5	4	13	19	-	2	239	247	27	15	1	2	7.5	1.5	2.5	1.375	1	2	5/16	3.5	2.375	20	14	1.5	1.5	4.875
PIER 3	565.2034	10	126	98	224	7.72	0.5	4	13	19	-	2	239	247	27	15	1	2	7.5	1.5	2.5	1.375	1	2	5/16	3.5	2.375	20	14	1.5	1.5	4.875
END ABUT.	565.2033	10	63	69	132	6.86	0.5	6	12	16	-	3	185	192	23	14	1	2	7	1.5	2.5	1.375	1	2	5/16	3.5	2.375	17	13	1.5	1.5	6.125

NOTE: T_2 IS UPSTATION OF T_1 (TYP.)

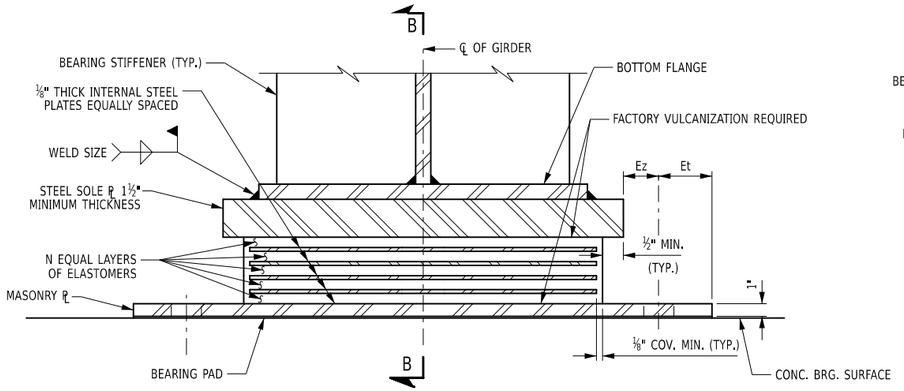

ELEVATION
TYPICAL EXPANSION BEARING

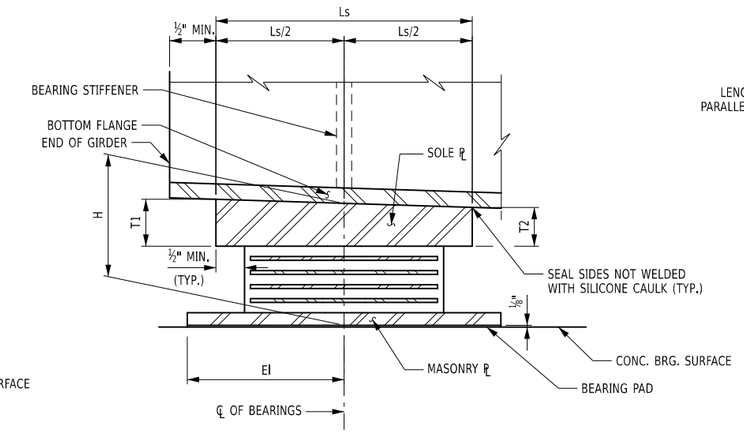

SECTION B-B

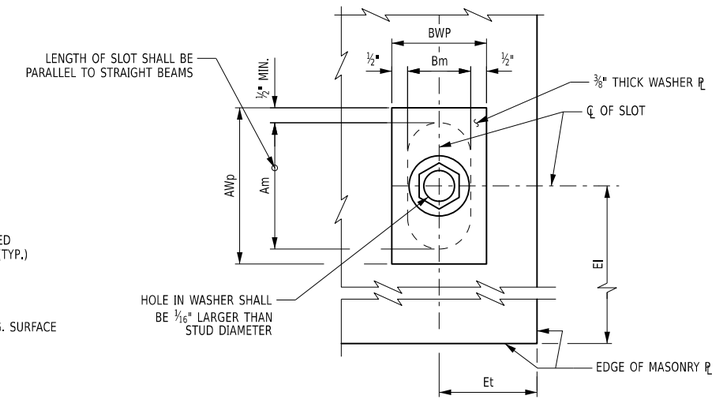

TYPICAL SLOTTED HOLE DETAIL

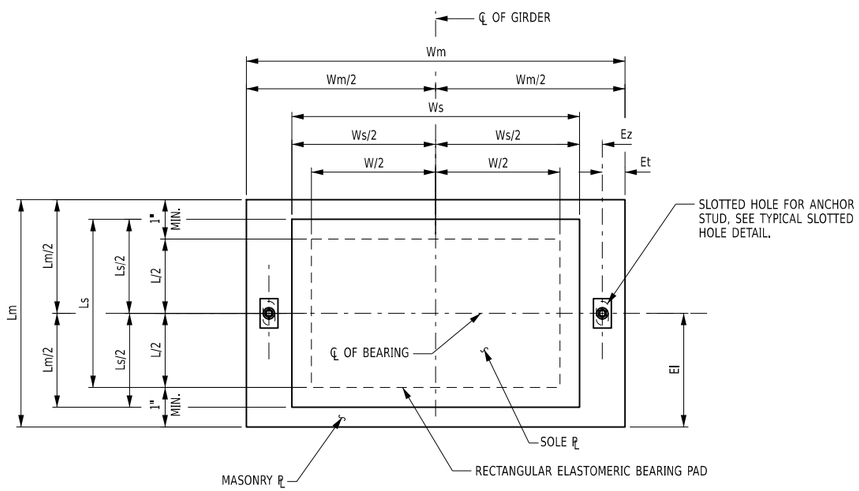

PLAN
TYPICAL RECTANGULAR EXPANSION BEARING

NOTES:

1. THE BEARINGS SHALL MEET THE REQUIREMENTS OF STANDARD 565 UNLESS OTHERWISE NOTED.
2. ALL ELASTOMER SHALL BE 50 DUROMETER HARDNESS ON THE SHORE A SCALE.
3. ALL STEEL EXCEPT THE INTERNATIONAL STEEL PLATES SHALL CONFORM TO ASTM A709, GR. 50, UNLESS OTHERWISE NOTED.
4. BEARING PADS SHALL CONFORM TO ONE OF THE FOLLOWING MATERIAL SPECIFICATIONS: 728-01, 728-02, OR 728-03.
5. INSTALLATION ALIGNMENT;
   THE MAXIMUM VARIATION FROM THE PERFECT ALIGNMENT UNDER FULL LOAD SHALL NOT EXCEED 3/16". THIS VARIATION SHALL BE MEASURED AS THE HORIZONTAL DISTANCE BETWEEN THE CENTERLINE OF THE HIGHEST ELASTOMER SURFACE AND THE CENTERLINE OF THE LOWEST ELASTOMER SURFACE.
6. CONCRETE SURFACES UNDER THE BEARINGS SHALL CONFORM THE SUBSECTION 564.3.02"CONCRETE BEARING SURFACE PREPARATION" OF THE NEW YORK STATE STANDARD SPECIFICATIONS, CONSTRUCTION AND MATERIALS.
7. THE BEARING PAD, ANCHOR STUDS, WASHER PLATES AND NUTS SHALL BE INCLUDED IN THE UNIT PRICE BID FOR THE BEARING ITEM.
8. IF THE ANCHOR STUDS ARE SET UNDER THE SOLE PLATE, A MINIMUM CLEARANCE EQUAL TO TWO TIMES THE THICKNESS OF ANCHOR NUT PLUS 1" SHALL BE MAINTAINED BETWEEN THE TOP OF MASONRY PLATE AND BOTTOM OF THE SOLE PLATE.

ALTERED ON:

AFFIXED ON: 08/10/2026

SIGNATURE:
STAMP:

SIGNATURE:
STAMP:

STATE OF NEW YORK · EDWIN TWISS · EXCELSIOR · 080650 · LICENSED PROFESSIONAL ENGINEER

IT IS A VIOLATION OF LAW FOR ANY PERSON, UNLESS THEY ARE ACTING UNDER THE DIRECTION OF A LICENSED PROFESSIONAL ENGINEER, ARCHITECT, LANDSCAPE ARCHITECT, OR LAND SURVEYOR, TO ALTER AN ITEM IN ANY WAY. IF AN ITEM BEARING THE STAMP OF A LICENSED PROFESSIONAL IS ALTERED, THE ALTERING ENGINEER, ARCHITECT, LANDSCAPE ARCHITECT, OR LAND SURVEYOR SHALL STAMP THE DOCUMENT AND INCLUDE THE NOTATION "ALTERED BY" FOLLOWED BY THEIR SIGNATURE, THE DATE OF SUCH ALTERATION, AND A SPECIFIC DESCRIPTION OF THE ALTERATION.

REVISIONS

DATE	DESCRIPTION	BY	SYM.

NEW YORK STATE | Thruway Authority

AECOM

TITLE OF PROJECT
SUPERSTRUCTURE REPLACEMENT
GSP CONNECTOR OVER NYS THRUWAY

LOCATION OF PROJECT
BIN 5514049 (MP 23.53)

TITLE OF DRAWING
BEARING DETAILS
(1 OF 2)

CONTRACT NUMBER: TANY 26-23B

DATE: JULY 2026

DRAWING NUMBER: ST-33

AJCE | CHECKED BY: | IW / MR / VZ | DRAFTED BY: | AJCE | CHECKED BY: | IW / MR / VZ | DESIGNED BY: | RWL | DESIGN SUPERVISOR:

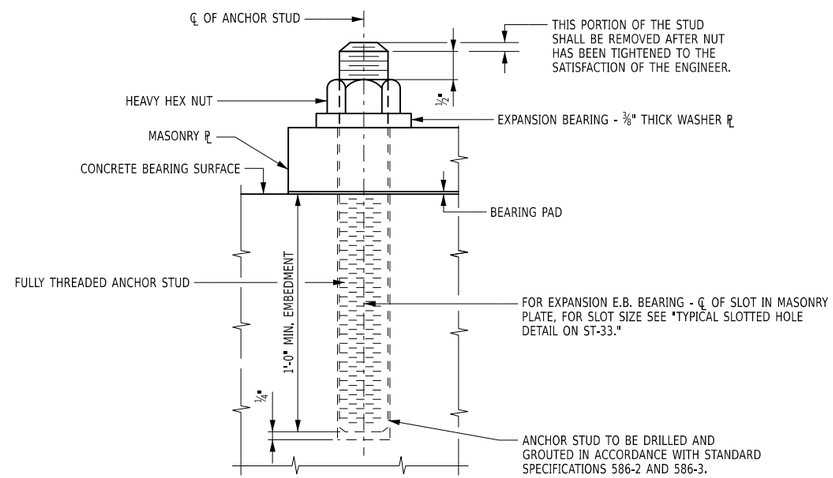

ANCHOR STUD

ANCHOR STUDS, WASHERS, WASHER PLATES, ANCHOR PLATES, AND NUTS SHALL MEET THE REQUIREMENTS OF SUBSECTION 723-60. THEY SHALL BE GALVANIZED IN ACCORDANCE WITH THE REQUIREMENTS OF MATERIAL SUBSECTION 719-01, "GALVANIZED COATINGS AND REPAIR METHODS." THE COST, INCLUDING GALVANIZING, SHALL BE INCLUDED IN THE UNIT PRICE BID FOR THE BEARING ITEM.

DESIGN SUPERVISOR: RWL
DESIGNED BY: IW / MR / VZ AICE
DRAFTED BY: IW / MR / VZ AICE
CHECKED BY: IW / MR / VZ AICE
CHECKED BY: IW / MR / VZ AICE

ALTERED ON:	AFFIXED ON: 08/10/2026
SIGNATURE: STAMP:	SIGNATURE: STAMP: STATE OF NEW YORK · EDWIN TWISS · EXCELSIOR · 080650 · LICENSED PROFESSIONAL ENGINEER

IT IS A VIOLATION OF LAW FOR ANY PERSON, UNLESS THEY ARE ACTING UNDER THE DIRECTION OF A LICENSED PROFESSIONAL ENGINEER, ARCHITECT, LANDSCAPE ARCHITECT, OR LAND SURVEYOR, TO ALTER AN ITEM IN ANY WAY. IF AN ITEM BEARING THE STAMP OF A LICENSED PROFESSIONAL IS ALTERED, THE ALTERING ENGINEER, ARCHITECT, LANDSCAPE ARCHITECT, OR LAND SURVEYOR SHALL STAMP THE DOCUMENT AND INCLUDE THE NOTATION "ALTERED BY" FOLLOWED BY THEIR SIGNATURE, THE DATE OF SUCH ALTERATION, AND A SPECIFIC DESCRIPTION OF THE ALTERATION.

REVISIONS

DATE	DESCRIPTION	BY	SYM.

NEW YORK STATE | Thruway Authority

AECOM

TITLE OF PROJECT
SUPERSTRUCTURE REPLACEMENT
GSP CONNECTOR OVER NYS THRUWAY

LOCATION OF PROJECT
BIN 5514049 (MP 23.53)

TITLE OF DRAWING
BEARING DETAILS
(2 OF 2)

CONTRACT NUMBER: TANY 26-23B

DATE: JULY 2026

DRAWING NUMBER: ST-34

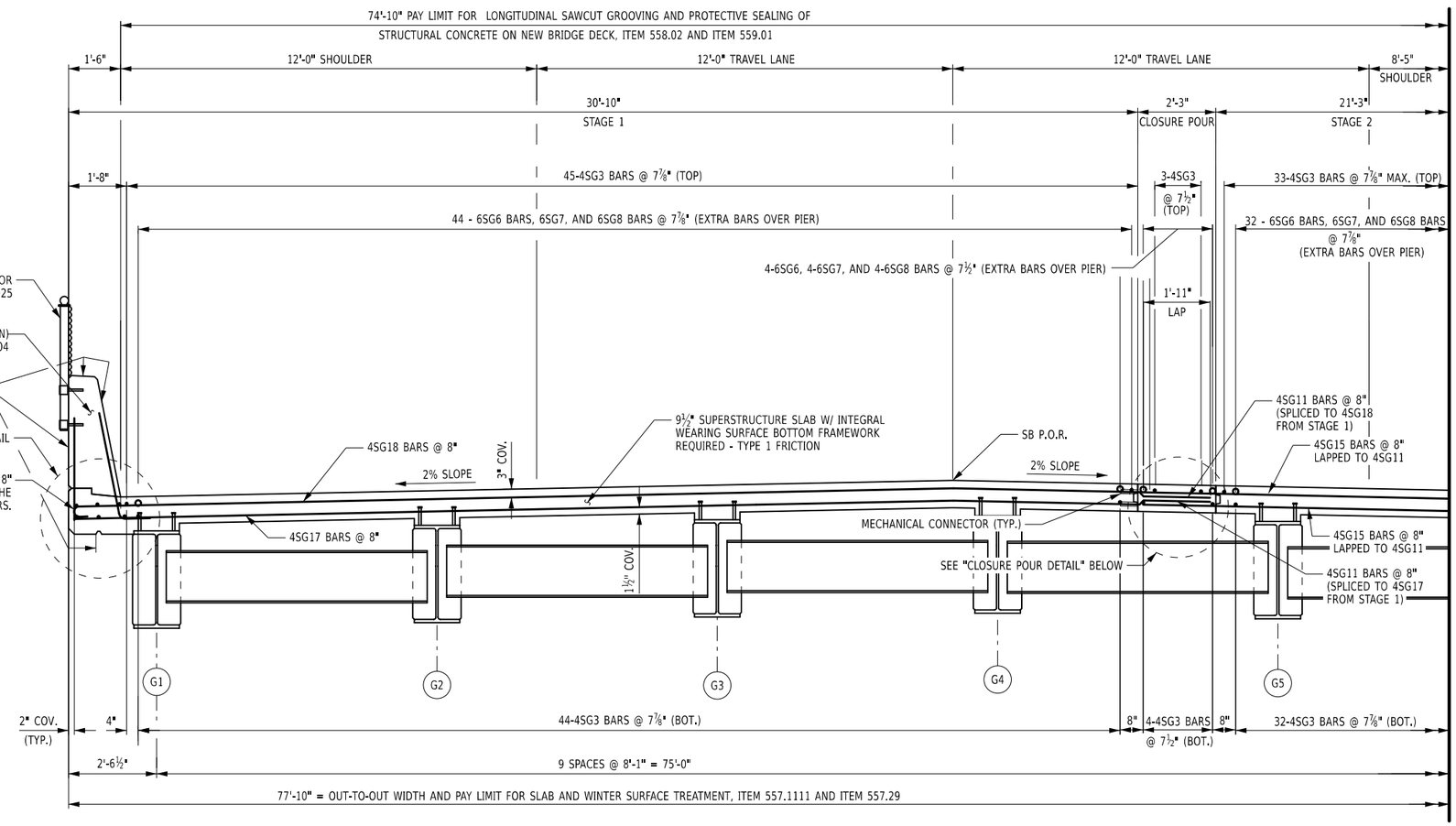

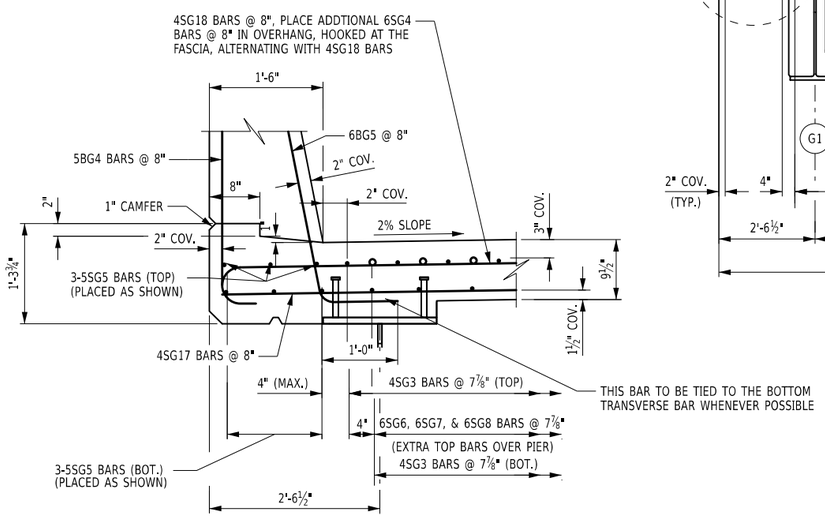

WEST FASCIA DETAIL
NOT TO SCALE

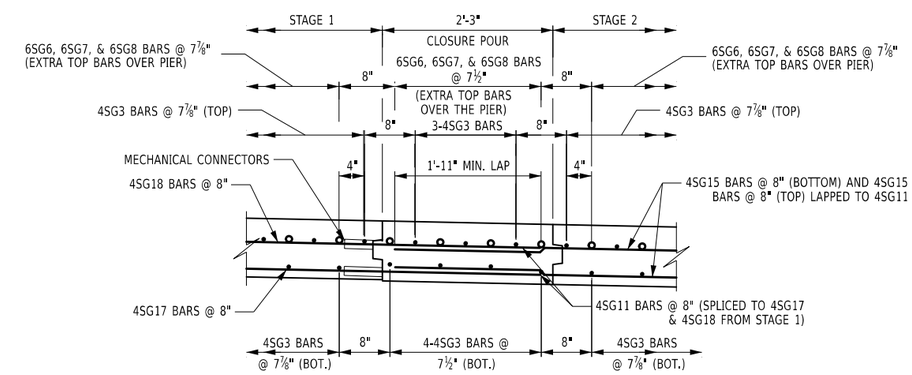

STAGE 2 CLOSURE POUR DETAIL
NOT TO SCALE

NOTES:

(G) DENOTES GALVANIZED BARS.

ALL REINFORCEMENT SHALL HAVE 2" COVER UNLESS OTHERWISE NOTED.

FOR FRAMING PLAN, SEE DRAWING NO. ST-37.

FOR DIAPHRAGM DETAILS, SEE DRAWING NO. ST-39.

FOR SINGLE SLOPE CONCRETE BARRIER DETAILS, SEE DRAWING NO. ST-53 AND ST-54.

FOR PROTECTIVE SCREENING DETAILS, SEE DRAWING ST-60.

(G#) - DENOTES GIRDER NUMBER.

2 0 2 4 6 8'
1" = 4'

ALTERED ON:	AFFIXED ON: 08/10/2026
SIGNATURE: STAMP:	SIGNATURE: STAMP: STATE OF NEW YORK · EDWIN TWISS · EXCELSIOR · 080650 · LICENSED PROFESSIONAL ENGINEER

IT IS A VIOLATION OF LAW FOR ANY PERSON, UNLESS THEY ARE ACTING UNDER THE DIRECTION OF A LICENSED PROFESSIONAL ENGINEER, ARCHITECT, LANDSCAPE ARCHITECT, OR LAND SURVEYOR, TO ALTER AN ITEM IN ANY WAY. IF AN ITEM BEARING THE STAMP OF A LICENSED PROFESSIONAL IS ALTERED, THE ALTERING ENGINEER, ARCHITECT, LANDSCAPE ARCHITECT, OR LAND SURVEYOR SHALL STAMP THE DOCUMENT AND INCLUDE THE NOTATION "ALTERED BY" FOLLOWED BY THEIR SIGNATURE, THE DATE OF SUCH ALTERATION, AND A SPECIFIC DESCRIPTION OF THE ALTERATION.

REVISIONS

DATE	DESCRIPTION	BY	SYM.

NEW YORK STATE | Thruway Authority

AECOM

TITLE OF PROJECT: SUPERSTRUCTURE REPLACEMENT GSP CONNECTOR OVER NYS THRUWAY

LOCATION OF PROJECT: BIN 5514049 (MP 23.53)

TITLE OF DRAWING: TRANSVERSE SECTION (1 OF 2)

CONTRACT NUMBER: TANY 26-23B

DATE: JULY 2026

DRAWING NUMBER: ST-35

AICE | CHECKED BY: | IW / MR / VZ | DRAFTED BY: | AICE | CHECKED BY: | IW / MR / VZ | DESIGNED BY: | RWL | DESIGN SUPERVISOR:

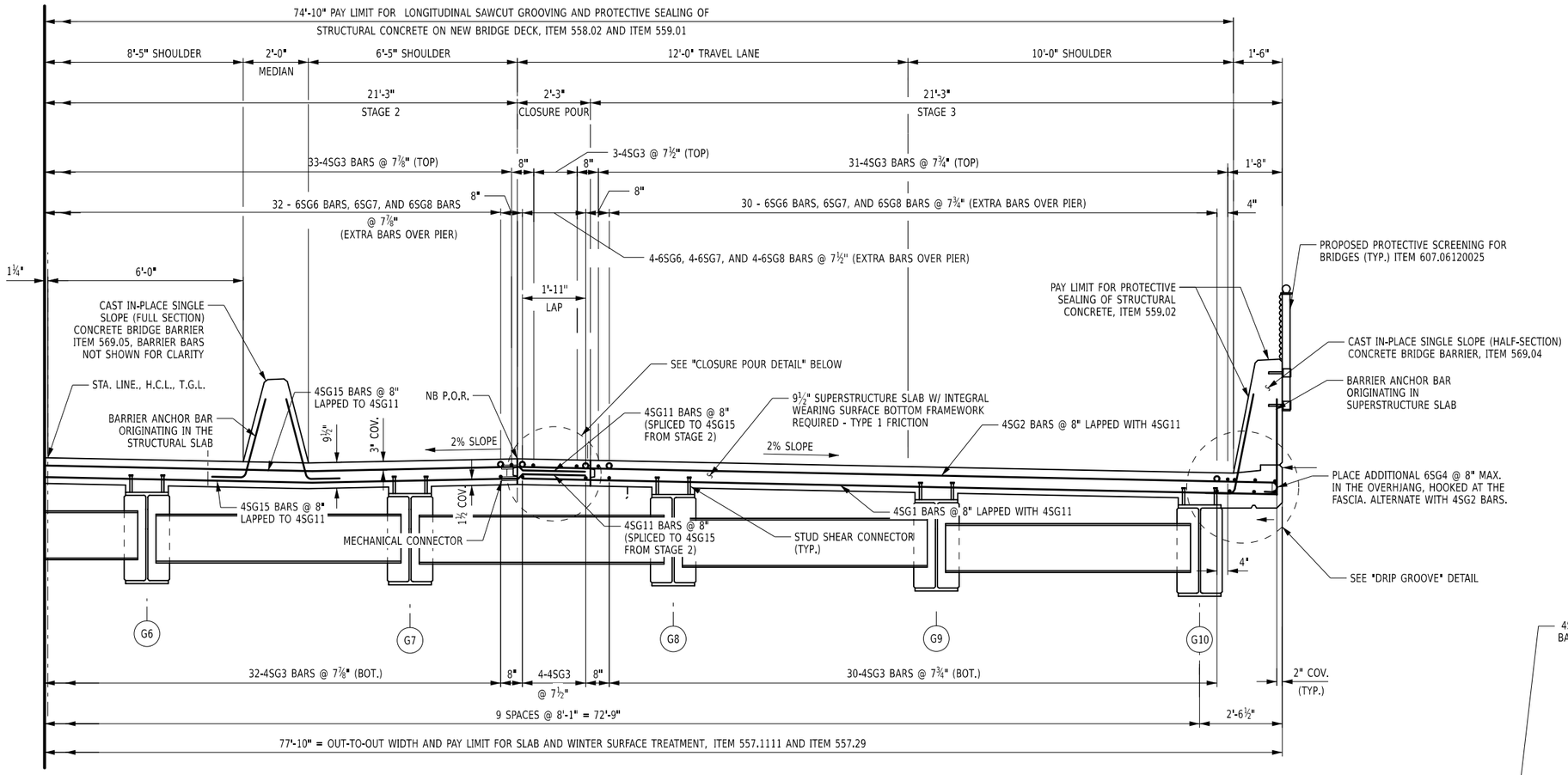

TRANSVERSE SECTION

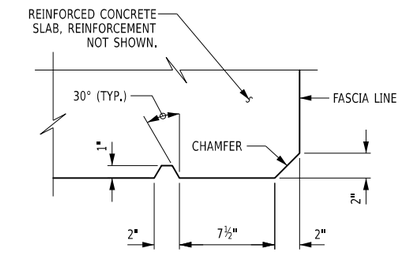

NOTE:

DRIP GROOVE STOPS 3'-0" FROM FACES OF ABUTMENTS OR PIERS WITH A 90° TURN TOWARD FASCIA THAT INTERSECTS THE CHAMFER.

DRIP GROOVE DETAIL

NOTES:

(G) DENOTES GALVANIZED BARS.

ALL REINFORCEMENT SHALL HAVE 2" COVER UNLESS OTHERWISE NOTED.

FOR FRAMING PLAN, SEE DRAWING NO. ST-37.

FOR DIAPHRAGM DETAILS, SEE DRAWING NO. ST-39.

FOR SINGLE SLOPE CONCRETE BARRIER DETAILS, SEE DRAWING NO. ST-53 AND ST-54.

FOR SINGLE SLOPE (FULL SECTION) CONCRETE BARRIER DETAILS, SEE DRAWING NO. ST-55

FOR PROTECTIVE SCREENING DETAILS, SEE DRAWING ST-60.

(G#) - DENOTES GIRDER NUMBER.

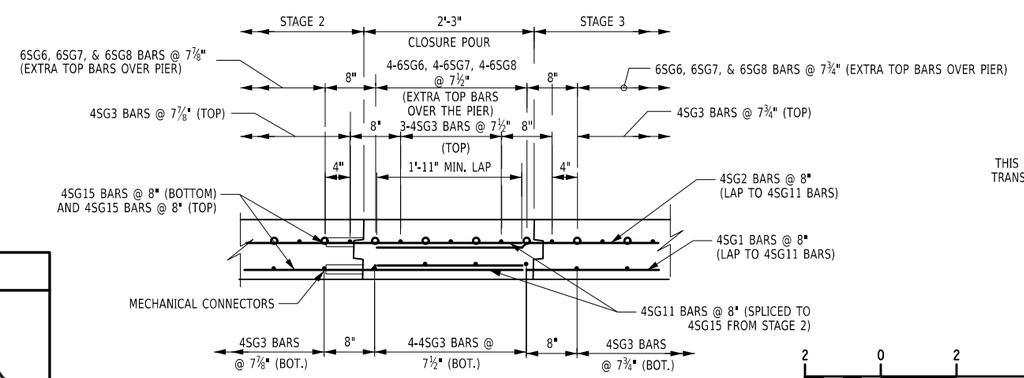

CLOSURE POUR DETAIL
NOT TO SCALE

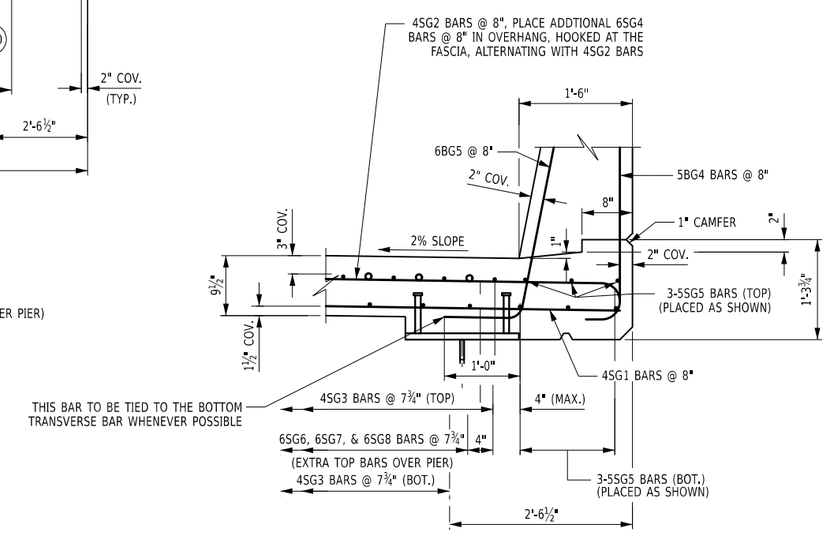

EAST FASCIA DETAIL
NOT TO SCALE

ALTERED ON:	AFFIXED ON: 08/10/2026
SIGNATURE: STAMP:	SIGNATURE: STAMP: STATE OF NEW YORK · EDWIN TWISS · 080650 · LICENSED PROFESSIONAL ENGINEER

IT IS A VIOLATION OF LAW FOR ANY PERSON, UNLESS THEY ARE ACTING UNDER THE DIRECTION OF A LICENSED PROFESSIONAL ENGINEER, ARCHITECT, LANDSCAPE ARCHITECT, OR LAND SURVEYOR, TO ALTER AN ITEM IN ANY WAY. IF AN ITEM BEARING THE STAMP OF A LICENSED PROFESSIONAL IS ALTERED, THE ALTERING ENGINEER, ARCHITECT, LANDSCAPE ARCHITECT, OR LAND SURVEYOR SHALL STAMP THE DOCUMENT AND INCLUDE THE NOTATION "ALTERED BY" FOLLOWED BY THEIR SIGNATURE, THE DATE OF SUCH ALTERATION, AND A SPECIFIC DESCRIPTION OF THE ALTERATION.

REVISIONS

DATE	DESCRIPTION	BY	SYM.

NEW YORK STATE | Thruway Authority

AECOM

TITLE OF PROJECT: SUPERSTRUCTURE REPLACEMENT GSP CONNECTOR OVER NYS THRUWAY

LOCATION OF PROJECT: BIN 5514049 (MP 23.53)

TITLE OF DRAWING: TRANSVERSE SECTION (2 OF 2)

CONTRACT NUMBER: TANY 26-23B

DATE: JULY 2026

DRAWING NUMBER: ST-36

AICE | CHECKED BY: | IW / MR / VZ | DRAFTED BY: | AICE | CHECKED BY: | IW / MR / VZ | DESIGNED BY: | RWL | DESIGN SUPERVISOR:

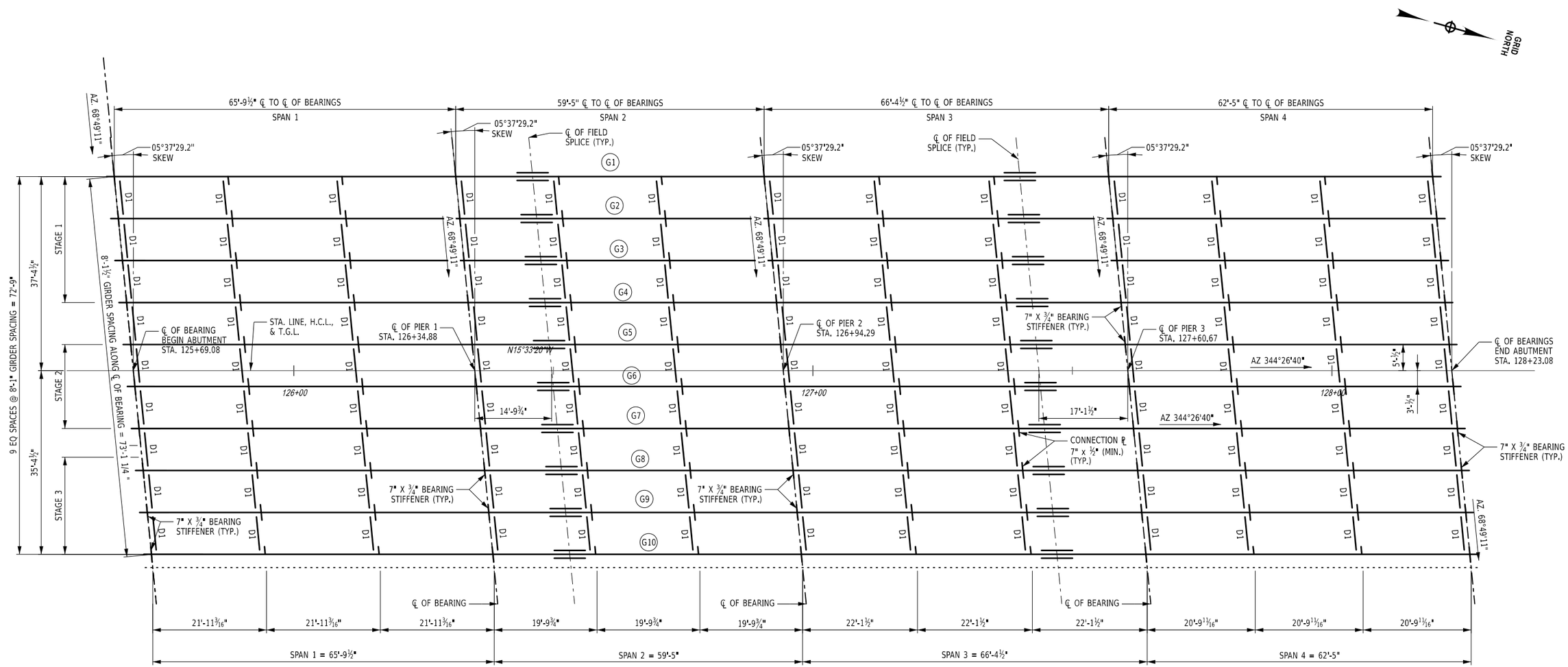

FRAMING PLAN

STRUCTURAL STEEL NOTES:

1. CONNECTIONS SHALL BE MADE ACCORDING TO THE NEW YORK STATE STEEL CONSTRUCTION MANUAL.
2. UNLESS OTHERWISE INDICATED, BOLTED CONNECTIONS SHALL BE MADE WITH ⅞" DIA. ASTM F3125, GRADE A325 HIGH-STRENGTH BOLTS.
3. THE CONTRACTOR MAY BE PLACE DIAPHRAGMS ON EITHER SIDE OF THE BEARING STIFFENERS OR CONNECTION PLATES AS NECESSARY FOR CORRECT ALIGNMENT, PROVIDED THERE WILL BE NO INTERFERENCE WITH OTHER STRUCTURAL DETAILS.
4. TAPERED OR FLAT SHIM PLATES MAY BE USED IN THE CONNECTION BETWEEN SKEWED DIAPHRAGMS AND THE BEARING STIFFENERS, STIFFENER CONNECTION PLATES OR GUSSET PLATES. VARIABLE THICKNESS OF SHIM PLATES MAY BE USED. THE MINIMUM THICKNESS OF SHIM PLATE SHALL BE ⅛" WITH A MAXIMUM NUMBER OF THREE SHIM PLATES PERMITTED AT ANY CONNECTION. THE TOTAL THICKNESS OF ALL SHIM PLATES USED AT ANY CONNECTION SHALL NOT EXCEED 1" SHIM. PLATES SHALL HAVE THE DIMENSIONS OF THE FAYING SURFACE. THE SHIM MATERIAL SHALL CONFORM TO ASTM DESIGNATION A709(W) FOR WEATHERING STEEL APPLICATIONS. NO ADDITIONAL PAYMENT WILL BE MADE FOR FURNISHING AND PLACING THE SHIM PLATES.

STRUCTURAL STEEL NOTES (CONT.)

6. DIAPHRAGM MEMBERS SHALL BE BLOCKED AS SHOWN, WITH THEIR FLANGE CUT BACK ON ONE SIDE, AND CHIPPED OR GROUND FLUSH. IN LIEU OF BLOCKING THE DIAPHRAGM MEMBER, THE FABRICATOR SHALL HAVE THE OPTION OF COPING THE FLANGE.
7. FOR LONGITUDINAL JOINTS AT STAGE CONSTRUCTION LINES, ONLY ONE SIDE OF THE INTERMEDIATE DIAPHRAGMS UNDER THE JOINT SHALL BE CONNECTED WHEN ERECTED. AFTER ALL PORTIONS OF THE NEWER DECK HAVE BEEN POURED (INSTALLED FOR PRECAST DECK PANELS) AND SET TO THE SATISFACTION OF THE ENGINEER, THE OTHER SIDE OF THE DIAPHRAGMS SHALL BE CONNECTED AND THE CLOSURE JOINT PLACED.
8. ALL BOLT HEADS SHALL BE PLACED ON THE TOP SIDE OF CONNECTIONS UNLESS OTHERWISE NOTED.

10 0 10 20 30 40'
1" = 20'

ALTERED ON:	AFFIXED ON: 08/10/2026
SIGNATURE: STAMP:	SIGNATURE: STAMP: STATE OF NEW YORK · EDWIN TWISS · EXCELSIOR · 080650 · LICENSED PROFESSIONAL ENGINEER

IT IS A VIOLATION OF LAW FOR ANY PERSON, UNLESS THEY ARE ACTING UNDER THE DIRECTION OF A LICENSED PROFESSIONAL ENGINEER, ARCHITECT, LANDSCAPE ARCHITECT, OR LAND SURVEYOR, TO ALTER AN ITEM IN ANY WAY. IF AN ITEM BEARING THE STAMP OF A LICENSED PROFESSIONAL IS ALTERED, THE ALTERING ENGINEER, ARCHITECT, LANDSCAPE ARCHITECT, OR LAND SURVEYOR SHALL STAMP THE DOCUMENT AND INCLUDE THE NOTATION "ALTERED BY" FOLLOWED BY THEIR SIGNATURE, THE DATE OF SUCH ALTERATION, AND A SPECIFIC DESCRIPTION OF THE ALTERATION.

REVISIONS

DATE	DESCRIPTION	BY	SYM.

NEW YORK STATE | Thruway Authority

AECOM

TITLE OF PROJECT: SUPERSTRUCTURE REPLACEMENT GSP CONNECTOR OVER NYS THRUWAY

LOCATION OF PROJECT: BIN 5514049 (MP 23.53)

TITLE OF DRAWING: FRAMING PLAN

CONTRACT NUMBER: TANY 26-23B

DATE: JULY 2026

DRAWING NUMBER: ST-37

DESIGN SUPERVISOR: RWL | DESIGNED BY: IW / MR / VZ | DRAFTED BY: IW / MR / VZ | CHECKED BY: AICE | CHECKED BY: AICE

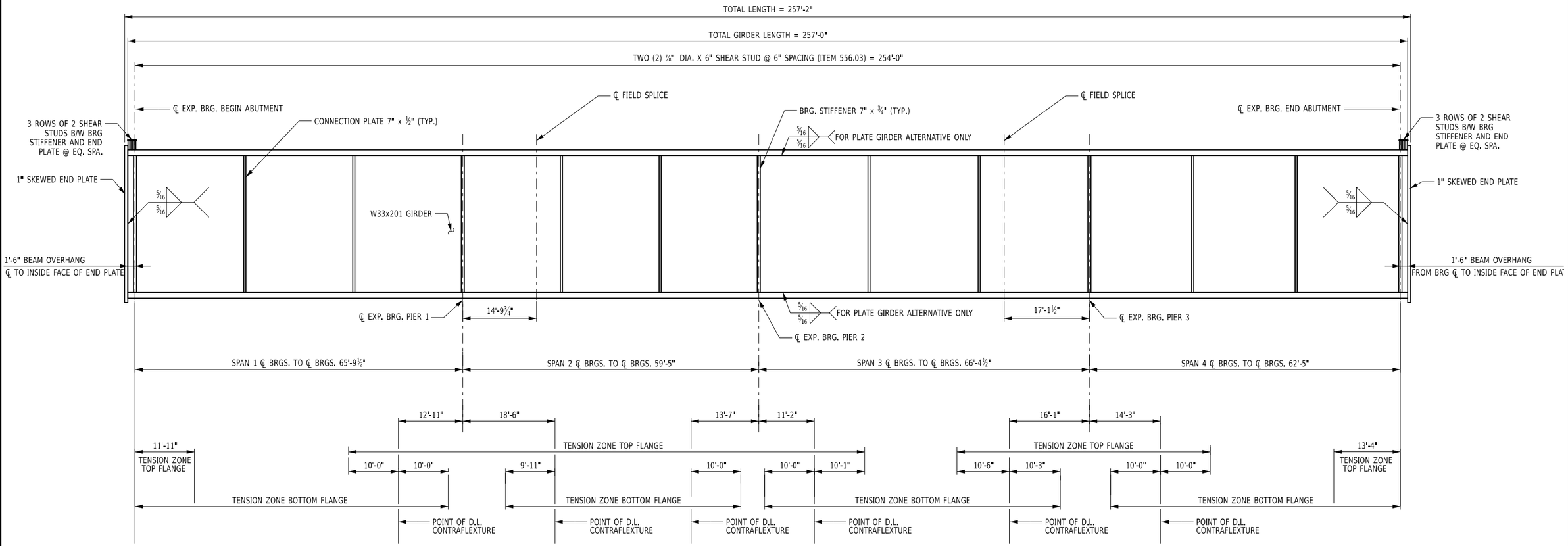

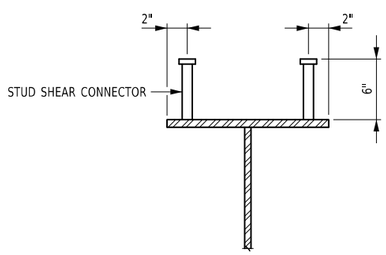

STUD SHEAR CONNECTOR DETAIL

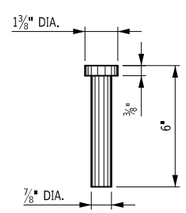

STUD DETAIL

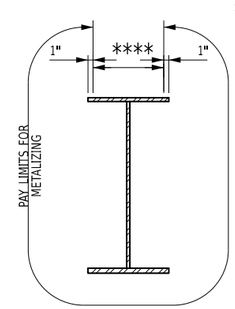

METALIZING LIMITS

**** COAT THIS AREA WITH AN ORGANIC ZINC PRIMER CONFORMING TO NYSDOT MATERIAL SPECIFICATION 708-01 OR 708-02. PRIME COAT SHALL BE APPLIED AT A THICKNESS BETWEEN 0.5 AND 1.5 MILS. COST TO BE INCLUDED IN THE UNIT PRICE BID FOR THE METALIZING ITEM.

UNLESS SHOWN IN THESE DETAILS, THERE SHALL BE NO WELDING WITHIN THE GIRDER TENSION ZONES. THE ATTACHMENT OF FORMING DEVICES OR OTHER CONSTRUCTION AIDS BY WELDING WITH THE TENSION AREAS SHOWN IS PROHIBITED.

THERE SHALL BE NO WELDING TO GALVANIZED OR METALIZED GIRDERS FOR THE ATTACHMENT OF FORMING DEVICES.

THE ENDS OF ALL GIRDERS AND BEARING STIFFENERS SHALL BE VERTICAL UNDER FULL DEAD LOAD. ALL CONNECTION PLATES AND INTERMEDIATE STIFFENERS MAY BE PERPENDICULAR TO THE TOP FLANGES.

ALL STRUCTURAL STEEL SHALL BE PAID FOR UNDER ITEM 564.0501

PLATE GIRDER ALTERNATIVE	
TOP FLANGE	16" X 1⅛"
WEB	32" X ⅝"
BOTTOM FLANGE	16" X 1⅛"

ALTERED ON:

AFFIXED ON: 08/10/2026

SIGNATURE:
STAMP:

SIGNATURE:
STAMP:

STATE OF NEW YORK
EDWIN TWISS
EXCELSIOR
080650
LICENSED PROFESSIONAL ENGINEER

IT IS A VIOLATION OF LAW FOR ANY PERSON, UNLESS THEY ARE ACTING UNDER THE DIRECTION OF A LICENSED PROFESSIONAL ENGINEER, ARCHITECT, LANDSCAPE ARCHITECT, OR LAND SURVEYOR, TO ALTER AN ITEM IN ANY WAY. IF AN ITEM BEARING THE STAMP OF A LICENSED PROFESSIONAL IS ALTERED, THE ALTERING ENGINEER, ARCHITECT, LANDSCAPE ARCHITECT, OR LAND SURVEYOR SHALL STAMP THE DOCUMENT AND INCLUDE THE NOTATION "ALTERED BY" FOLLOWED BY THEIR SIGNATURE, THE DATE OF SUCH ALTERATION, AND A SPECIFIC DESCRIPTION OF THE ALTERATION.

REVISIONS

DATE	DESCRIPTION	BY	SYM.

NEW YORK STATE | Thruway Authority

AECOM

TITLE OF PROJECT
SUPERSTRUCTURE REPLACEMENT
GSP CONNECTOR OVER NYS THRUWAY

LOCATION OF PROJECT
BIN 5514049 (MP 23.53)

TITLE OF DRAWING
GIRDER ELEVATION

CONTRACT NUMBER:
TANY 26-23B

DATE:
JULY 2026

DRAWING NUMBER:
ST-38

AICE
CHECKED BY:
IW / MR / VZ
DRAFTED BY:
AICE
CHECKED BY:
IW / MR / VZ
DESIGNED BY:
RWL
DESIGN SUPERVISOR:

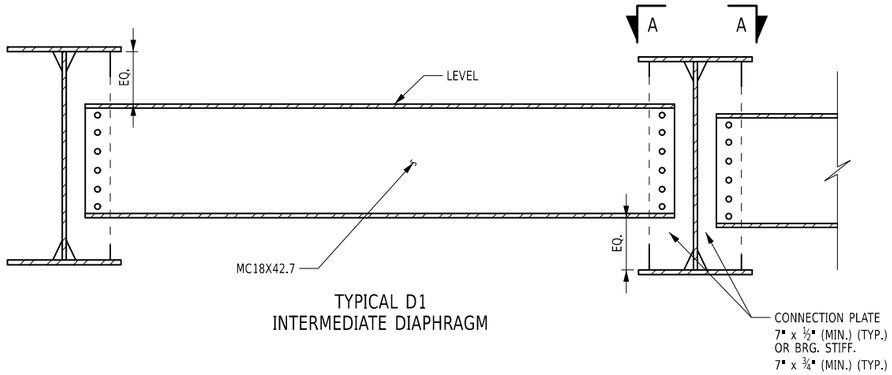

TYPICAL D1
INTERMEDIATE DIAPHRAGM

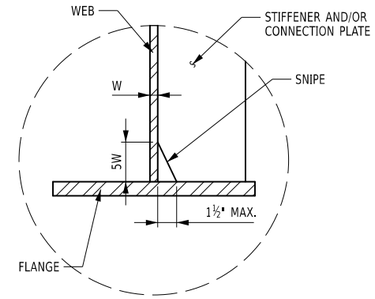

SNIPE DETAIL

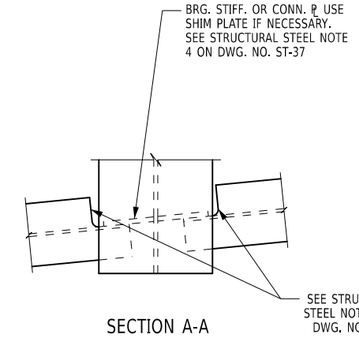

SECTION A-A

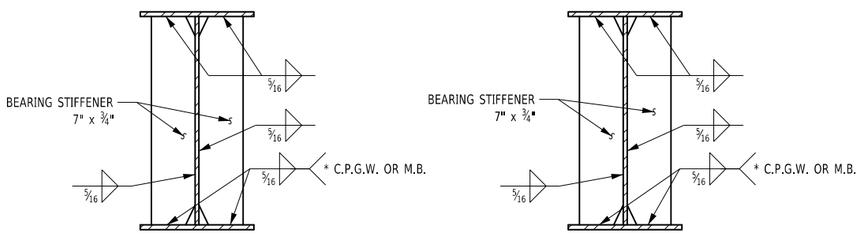

BEARING STIFFENER
AT ABUTMENT

BEARING STIFFENER
AT PIER

FASCIA GIRDER
CONNECTION PLATE

INTERIOR GIRDER
CONNECTION PLATE

GIRDER SECTIONS

COAT THIS AREA WITH AN ORGANIC ZINC PRIMER CONFORMING TO NYSDOT MATERIAL SPECIFICATION 708-01 OR 708-02 PRIME COAT SHALL BE APPLIED AT A THICKNESS BETWEEN 0.5 AND 1.5 MILS. COST BE INCLUDED IN THE PRICE BID FOR THE ITEM 572.00020125

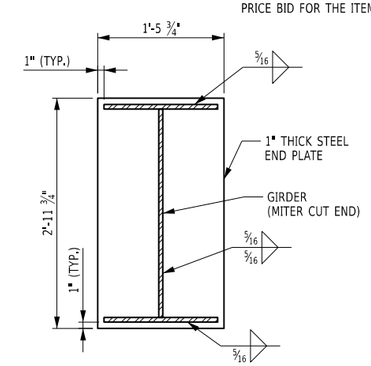

SKEWED END PLATE DETAIL

NOTE:
DO NOT WELD AROUND FLANGE TIPS, STOP WELD ½" FROM WEB TO FLANGE INTERSECTION AND ENDS OF FLANGE PLATES

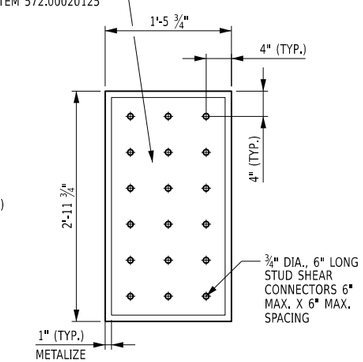

SKEWED END PLATE
SHEAR CONNECTOR LAYOUT

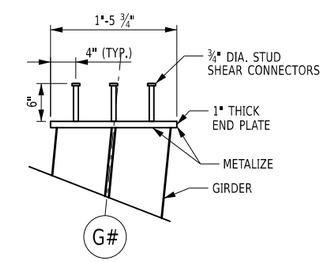

SKEWED END PLATE
PLAN DETAIL

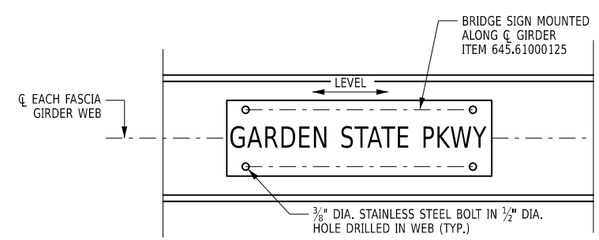

NOTE: MOUNT ONE SIGN OVER NORTHBOUND MERGING LANE AND SOUTHBOUND SHOULDER.

BRIDGE IDENTIFICATION
SIGN MOUNTING DETAIL
NOT TO SCALE

NOTES:

*C.P.G.W. = COMPLETE PENETRATION GROOVE WELD
*M.B. = MILL TO BEAR

ALTERED ON:	AFFIXED ON: 08/10/2026
SIGNATURE: STAMP:	SIGNATURE: STAMP: STATE OF NEW YORK · EDWIN TWISS · EXCELSIOR · 080650 · LICENSED PROFESSIONAL ENGINEER

IT IS A VIOLATION OF LAW FOR ANY PERSON, UNLESS THEY ARE ACTING UNDER THE DIRECTION OF A LICENSED PROFESSIONAL ENGINEER, ARCHITECT, LANDSCAPE ARCHITECT, OR LAND SURVEYOR, TO ALTER AN ITEM IN ANY WAY. IF AN ITEM BEARING THE STAMP OF A LICENSED PROFESSIONAL IS ALTERED, THE ALTERING ENGINEER, ARCHITECT, LANDSCAPE ARCHITECT, OR LAND SURVEYOR SHALL STAMP THE DOCUMENT AND INCLUDE THE NOTATION "ALTERED BY" FOLLOWED BY THEIR SIGNATURE, THE DATE OF SUCH ALTERATION, AND A SPECIFIC DESCRIPTION OF THE ALTERATION.

REVISIONS

DATE	DESCRIPTION	BY	SYM.

NEW YORK STATE | Thruway Authority

AECOM

TITLE OF PROJECT
SUPERSTRUCTURE REPLACEMENT
GSP CONNECTOR OVER NYS THRUWAY

LOCATION OF PROJECT
BIN 5514049 (MP 23.53)

TITLE OF DRAWING
STEEL DETAILS
(1 OF 2)

CONTRACT NUMBER:
TANY 26-23B

DATE:
JULY 2026

DRAWING NUMBER:
ST-39

DESIGN SUPERVISOR: RWL | DESIGNED BY: IW / MR / VZ | CHECKED BY: AICE | DRAFTED BY: IW / MR / VZ | CHECKED BY: AICE

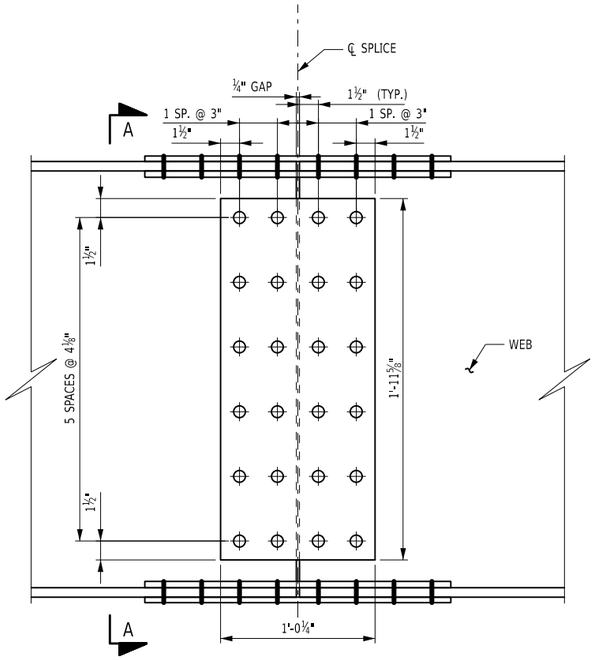

WEB SPLICE DETAIL

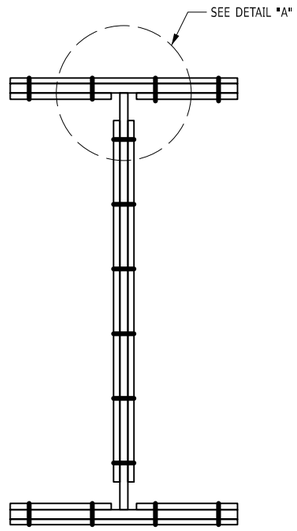

SECTION A-A

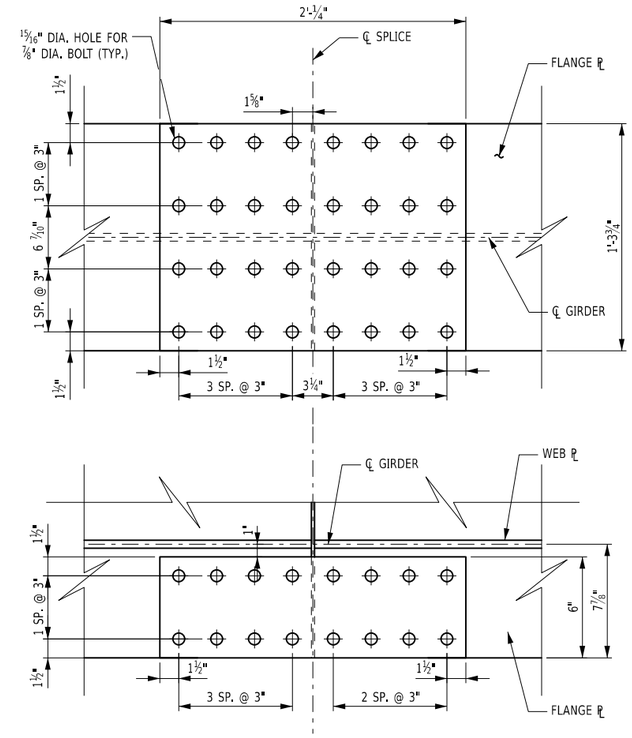

TOP & BOTTOM FLANGE SPLICE DETAIL

	TOP FLANGE SPLICE	BOTTOM FLANGE SPLICE	WEB SPLICE
SPLICE PL	1 - 15 7/10" x 11/16" x 24¼" PL 2 - 6" x ⅞" x 24¼" PL	1 - 15 7/10" x 11/16" x 24¼" PL 2 - 6" x ⅞" x 24¼" PL	2 - 12¾" x 11/16" x 23⅝" PL
NO. OF BOLTS	16 EACH SIDE	16 EACH SIDE	12 EACH SIDE

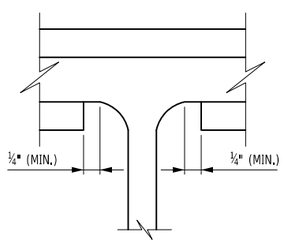

DETAIL "A"

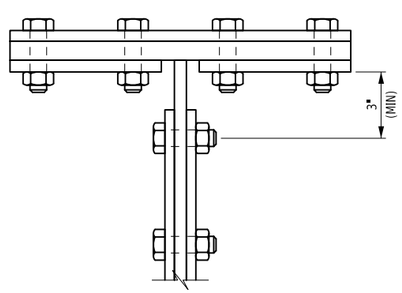

TOP FLANGE

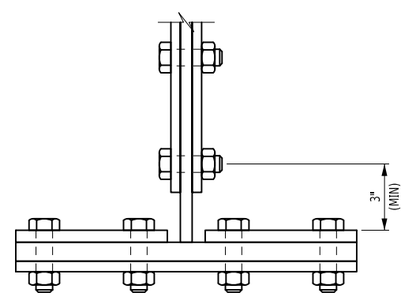

BOTTOM FLANGE

⅞" DIAMETER BOLT ENTERING AND TIGHTENING CLEARANCES

GIRDER SPLICE NOTES:

1. ALL COSTS FOR BOLTS, NUTS, AND WASHERS SHALL BE INCLUDED IN THE PRICE BID FOR STRUCTURAL STEEL.
2. SPLICE DESIGNS ARE BASED ON THE LOCATIONS INDICATED. THE CONTRACTOR HAS THE OPTION OF USING ALTERNATE SPLICE LOCATIONS, HOWEVER, RELOCATION REQUESTS MUST BE SUBMITTED TO THE NYSTA FOR APPROVAL. FIELD SPLICE REVISIONS DUE TO SPLICE RELOCATION SHALL BE SEALED BY A LICENSED PROFESSIONAL ENGINEER. NO ADDITIONAL COMPENSATION WILL BE MADE TO THE CONTRACTOR FOR RELOCATING THE SPLICE. FABRICATION SHALL CONFORM TO THE THE CURRENT NEW YORK STATE STEEL CONSTRUCTION MANUAL.
3. ALL SPLICE PLATES SHALL CONSIST OF THE SAME GRADE OF STEEL AS THE MEMBER(S) BEING SPLICED AND THEIR COST INCLUDED IN THE PRICE BID FOR THE STRUCTURAL STEEL.
4. SUBJECT TO NYSTA APPROVAL, THE CONTRACTOR CAN PROPOSE THE USE OF A WELDED SPLICE. HOWEVER, ALL THE COSTS ASSOCIATED WITH THIS CHANGE WILL BE AT THE CONTRACTOR'S EXPENSE. ADDITIONALLY, A DETAILED WELDING PROCEDURE, AS PER THE NYS STEEL CONSTRUCTION MANUAL 203.5(B), OF THE NYS STEEL CONSTRUCTION MANUAL SHALL BE SUBMITTED TO THE NYSTA FOR APPROVAL.
5. BOLT LOCATIONS MAY HAVE TO BE MOVED LATERALLY ON THEIR FLANGE TO MEET SEALING REQUIREMENTS AS DESCRIBED IN SECTION 203.14 OF THE NYS STEEL CONSTRUCTION MANUAL.

BOLT, NUTS & WASHERS:

1. ALL BOLTS SHALL BE ⅞" DIAMETER, UNLESS NOTED OTHERWISE.

GALVANIZED/METALIZED STEEL APPLICATIONS:

1. BOLTS SHALL BE ASTM F3125, GRADE A325, TYPE 1 (HOT DIPPED GALVANIZED).
2. NUTS SHALL BE A563, GRADE DH (HOT DIPPED GALVANIZED); OR A194, GRADE 2H (HOT DIPPED GALVANIZED).
3. WASHERS SHALL BE F436, TYPE 1 (HOT DIPPED GALVANIZED).

ALTERED ON:

AFFIXED ON: 08/10/2026

SIGNATURE:
STAMP:

SIGNATURE:
STAMP:

STATE OF NEW YORK · EDWIN TWISS · EXCELSIOR · 080650 · LICENSED PROFESSIONAL ENGINEER

IT IS A VIOLATION OF LAW FOR ANY PERSON, UNLESS THEY ARE ACTING UNDER THE DIRECTION OF A LICENSED PROFESSIONAL ENGINEER, ARCHITECT, LANDSCAPE ARCHITECT, OR LAND SURVEYOR, TO ALTER AN ITEM IN ANY WAY. IF AN ITEM BEARING THE STAMP OF A LICENSED PROFESSIONAL IS ALTERED, THE ALTERING ENGINEER, ARCHITECT, LANDSCAPE ARCHITECT, OR LAND SURVEYOR SHALL STAMP THE DOCUMENT AND INCLUDE THE NOTATION "ALTERED BY" FOLLOWED BY THEIR SIGNATURE, THE DATE OF SUCH ALTERATION, AND A SPECIFIC DESCRIPTION OF THE ALTERATION.

REVISIONS

DATE	DESCRIPTION	BY	SYM.

NEW YORK STATE | Thruway Authority

AECOM

TITLE OF PROJECT
SUPERSTRUCTURE REPLACEMENT
GSP CONNECTOR OVER NYS THRUWAY

LOCATION OF PROJECT
BIN 5514049 (MP 23.53)

TITLE OF DRAWING
STEEL DETAILS
(2 OF 2)

CONTRACT NUMBER: TANY 26-23B

DATE: JULY 2026

DRAWING NUMBER: ST-40

AICE | CHECKED BY: | IW / MR / VZ | DRAFTED BY: | AICE | CHECKED BY: | IW / MR / VZ | DESIGNED BY: | RWL | DESIGN SUPERVISOR:

MOMENT & SHEAR TABLE

			C.L. OF BRGS. BEG. ABUT.	0.1 L1	0.2 L1	0.3 L1	0.4 L1	0.5 L1	0.6 L1	0.7 L1	0.8 L1	0.9 L1	C.L. OF BRGS. PIER 1		0.1 L2	0.2 L2	0.3 L2	0.4 L2	0.5 L2	0.6 L2	0.7 L2	0.8 L2	0.9 L2	C.L. OF BRGS. PIER 2		0.1 L3	0.2 L3	0.3 L3	0.4 L3	0.5 L3	0.6 L3	0.7 L3	0.8 L3	0.9 L3	C.L. OF BRGS. PIER 3		0.1 L4	0.2 L4	0.3 L4	0.4 L4	0.5 L4	0.6 L4	0.7 L4	0.8 L4	0.9 L4	C.L. OF BRGS. END ABUT.
G1	D.L	MOMENT	0	172	296	370	396	372	300	179	9	-210	-478		-282	-126	-10	67	103	100	56	-27	-150	-313		-108	47	153	209	215	172	78	-65	-258	-501		-253	-49	112	228	300	328	312	252	148	0
		SHEAR	30	22	15	8	0	-7	-15	-22	-30	-37	-44	36	30	23	16	9	3	-4	-11	-17	-24	-31	35	27	20	12	5	-3	-10	-18	-25	-33	-40	43	36	29	22	15	8	1	-6	-13	-20	-27
	S.D.L.	MOMENT	0	46	79	99	105	99	79	47	2	-57	-129		-77	-35	-4	16	26	26	14	-8	-41	-85		-30	12	40	55	57	45	20	-18	-71	-135		-69	-14	29	60	79	87	83	67	40	0
		SHEAR	8	6	4	2	0	-2	-4	-6	-8	-10	-12	10	8	6	4	3	1	-1	-3	-5	-6	-8	9	7	5	3	1	-1	-3	-5	-7	-9	-11	12	10	8	6	4	2	0	-2	-4	-5	-7
	HL-93 (+)	MOMENT	0	329	553	690	745	727	648	492	288	123	97		128	272	422	513	535	515	424	281	148	153		154	302	469	576	604	578	472	296	135	82		121	284	475	616	686	700	646	519	310	0
		SHEAR	61	51	42	33	25	18	12	7	4	2	1	66	58	50	41	33	26	19	12	11	11	11	66	59	50	42	33	25	18	11	7	6	6	68	62	55	47	39	31	23	16	9	6	6
	HL-93 (-)	MOMENT	0	-30	-60	-91	-121	-151	-181	-211	-242	-380	-623		-450	-372	-322	-275	-221	-236	-272	-308	-378	-555		-344	-241	-211	-192	-181	-227	-273	-320	-420	-626		-406	-300	-263	-225	-188	-150	-113	-75	-38	0
		SHEAR	-5	-5	-8	-16	-23	-31	-40	-48	-55	-63	-69	-9	-9	-9	-12	-18	-25	-33	-41	-49	-57	-65	-9	-9	-9	-12	-18	-25	-33	-42	-50	-59	-67	-1	-1	-4	-7	-13	-19	-25	-33	-42	-51	-60
G2 TO G4	D.L	MOMENT	0	192	330	412	441	415	334	199	10	-234	-533		-314	-140	-11	74	115	111	63	-30	-167	-349		-120	53	171	233	240	191	87	-73	-288	-558		-282	-54	124	254	334	365	348	281	165	0
		SHEAR	33	25	17	8	0	-8	-16	-25	-33	-41	-50	41	33	26	18	11	3	-4	-12	-19	-27	-34	39	30	22	14	5	-3	-12	-20	-28	-37	-45	48	40	33	25	17	9	1	-7	-15	-23	-30
	S.D.L.	MOMENT	0	46	79	99	105	99	79	47	2	-57	-129		-77	-35	-4	16	26	26	14	-8	-41	-85		-30	12	40	55	57	45	20	-18	-71	-135		-69	-14	29	60	79	87	83	67	40	0
		SHEAR	8	6	4	2	0	-2	-4	-6	-8	-10	-12	10	8	6	4	3	1	-1	-3	-5	-6	-8	9	7	5	3	1	-1	-3	-5	-7	-9	-11	12	10	8	6	4	2	0	-2	-4	-5	-7
	HL-93 (+)	MOMENT	0	355	596	744	803	784	698	531	315	134	106		140	297	467	568	593	570	470	306	162	167		168	329	505	620	650	621	507	321	146	89		132	307	519	674	750	766	706	568	339	0
		SHEAR	82	69	56	44	34	25	17	10	5	2	2	88	78	67	56	45	34	25	16	15	15	15	89	78	67	56	45	34	24	15	9	8	8	92	83	73	63	52	41	31	21	12	8	8
	HL-93 (-)	MOMENT	0	-33	-65	-98	-130	-163	-195	-228	-265	-416	-681		-492	-407	-357	-301	-245	-261	-301	-336	-413	-606		-375	-263	-227	-209	-194	-244	-294	-347	-455	-678		-441	-326	-287	-246	-205	-164	-123	-82	-41	0
		SHEAR	-6	-6	-11	-21	-31	-42	-53	-64	-74	-84	-93	-11	-12	-12	-16	-24	-34	-44	-55	-66	-77	-87	-12	-12	-12	-16	-24	-34	-45	-56	-67	-79	-89	-2	-2	-5	-10	-17	-25	-34	-44	-56	-68	-80
G5 TO G7	D.L	MOMENT	0	192	330	412	441	415	334	199	10	-234	-533		-314	-140	-11	74	115	111	63	-30	-167	-349		-120	53	171	233	240	191	87	-73	-288	-558		-282	-54	124	254	334	365	348	281	165	0
		SHEAR	33	25	17	8	0	-8	-16	-25	-33	-41	-50	41	33	26	18	11	3	-4	-12	-19	-27	-34	39	30	22	14	5	-3	-12	-20	-28	-37	-45	48	40	33	25	17	9	1	-7	-15	-23	-30
	S.D.L.	MOMENT	0	68	116	146	156	146	117	69	2	-84	-191		-113	-51	-6	24	39	38	21	-12	-60	-125		-44	18	59	81	83	66	29	-27	-104	-200		-102	-21	42	89	117	129	123	99	59	0
		SHEAR	12	9	6	3	0	-3	-6	-9	-12	-15	-18	14	12	9	6	4	1	-2	-4	-7	-10	-12	14	11	8	5	2	-1	-4	-7	-10	-13	-16	17	14	12	9	6	3	0	-2	-5	-8	-11
	HL-93 (+)	MOMENT	0	355	596	744	803	784	698	531	315	134	106		140	297	467	568	593	570	470	306	162	167		168	329	505	620	650	621	507	321	146	89		132	307	519	674	750	766	706	568	339	0
		SHEAR	82	69	56	44	34	25	17	10	5	2	2	88	78	67	56	45	34	25	16	15	15	15	89	78	67	56	45	34	24	15	9	8	8	92	83	73	63	52	41	31	21	12	8	8
	HL-93 (-)	MOMENT	0	-33	-65	-98	-130	-163	-195	-228	-265	-416	-681		-492	-407	-357	-301	-245	-261	-301	-336	-413	-606		-375	-263	-227	-209	-194	-244	-294	-347	-455	-678		-441	-326	-287	-246	-205	-164	-123	-82	-41	0
		SHEAR	-6	-6	-11	-21	-31	-42	-53	-64	-74	-84	-93	-11	-12	-12	-16	-24	-34	-44	-55	-66	-77	-87	-12	-12	-12	-16	-24	-34	-45	-56	-67	-79	-89	-2	-2	-5	-10	-17	-25	-34	-44	-56	-68	-80
G8 TO G9	D.L	MOMENT	0	192	330	412	441	415	334	199	10	-234	-533		-314	-140	-11	74	115	111	63	-30	-167	-349		-120	53	171	233	240	191	87	-73	-288	-558		-282	-54	124	254	334	365	348	281	165	
		SHEAR	33	25	17	8	0	-8	-16	-25	-33	-41	-50	41	33	26	18	11	3	-4	-12	-19	-27	-34	39	30	22	14	5	-3	-12	-20	-28	-37	-45	48	40	33	25	17	9	1	-7	-15	-23	-30
	S.D.L.	MOMENT	0	54	92	115	123	115	92	55	2	-67	-151		-90	-40	-5	19	31	30	16	-9	-48	-99		-35	14	47	64	66	52	23	-22	-82	-158		-80	-16	33	70	92	102	97	78	47	
		SHEAR	9	7	5	2	0	-2	-5	-7	-9	-12	-14	11	9	7	5	3	1	-1	-3	-5	-8	-10	11	8	6	4	1	-1	-3	-6	-8	-10	-13	14	11	9	7	5	3	0	-2	-4	-6	-8
	HL-93 (+)	MOMENT	0	355	596	744	803	784	698	531	315	134	106		140	297	467	568	593	570	470	306	162	167		168	329	505	620	650	621	507	321	146	89		132	307	519	674	750	766	706	568	339	
		SHEAR	82	69	56	44	34	25	17	10	5	2	2	88	78	67	56	45	34	25	16	15	15	15	89	78	67	56	45	34	24	15	9	8	8	92	83	73	63	52	41	31	21	12	8	8
	HL-93 (-)	MOMENT	0	-33	-65	-98	-130	-163	-195	-228	-265	-416	-681		-492	-407	-357	-301	-245	-261	-301	-336	-413	-606		-375	-263	-227	-209	-194	-244	-294	-347	-455	-678		-441	-326	-287	-246	-205	-164	-123	-82	-41	
		SHEAR	-6	-6	-11	-21	-31	-42	-53	-64	-74	-84	-93	-11	-12	-12	-16	-24	-34	-44	-55	-66	-77	-87	-12	-12	-12	-16	-24	-34	-45	-56	-67	-79	-89	-2	-2	-5	-10	-17	-25	-34	-44	-56	-68	-80
G10	D.L	MOMENT	0	172	296	370	396	372	300	179	9	-210	-478		-282	-126	-10	67	103	100	56	-27	-150	-313		-108	47	153	209	215	172	78	-65	-258	-501		-253	-49	112	228	300	328	312	252	148	0
		SHEAR	30	22	15	8	0	-7	-15	-22	-30	-37	-44	36	30	23	16	9	3	-4	-11	-17	-24	-31	35	27	20	12	5	-3	-10	-18	-25	-33	-40	43	36	29	22	15	8	1	-6	-13	-20	-27
	S.D.L.	MOMENT	0	54	92	115	123	115	92	55	2	-67	-151		-90	-40	-5	19	31	30	16	-9	-48	-99		-35	14	47	64	66	52	23	-22	-82	-158		-80	-16	33	70	92	102	97	78	47	0
		SHEAR	9	7	5	2	0	-2	-5	-7	-9	-12	-14	11	9	7	5	3	1	-1	-3	-5	-8	-10	11	8	6	4	1	-1	-3	-6	-8	-10	-13	14	11	9	7	5	3	0	-2	-4	-6	-8
	HL-93 (+)	MOMENT	0	329	553	690	745	727	648	492	288	123	97		128	272	422	513	535	515	424	281	148	153		154	302	469	576	604	578	472	296	135	82		121	284	475	616	686	700	646	519	310	0
		SHEAR	61	51	42	33	25	18	12	7	4	2	1	66	58	50	41	33	26	19	12	11	11	11	66	59	50	42	33	25	18	11	7	6	6	68	62	55	47	39	31	23	16	9	6	6
	HL-93 (-)	MOMENT	0	-30	-60	-91	-121	-151	-181	-211	-242	-380	-623		-450	-372	-322	-275	-221	-236	-272	-308	-378	-555		-344	-241	-211	-192	-181	-227	-273	-320	-420	-626		-406	-300	-263	-225	-188	-150	-113	-75	-38	0
		SHEAR	-5	-5	-8	-16	-23	-31	-40	-48	-55	-63	-69	-9	-9	-9	-12	-18	-25	-33	-41	-49	-57	-65	-9	-9	-9	-12	-18	-25	-33	-42	-50	-59	-67	-1	-1	-4	-7	-13	-19	-25	-33	-42	-51	-60

MOMENTS AND SHEARS ARE UNFACTORED AND INCLUDE IMPACT
MOMENTS ARE EXPRESSED AS KIP-FEET
SHEARS ARE EXPRESSED AS KIPS

DESIGN LOAD TABLE

FASCIA GIRDERS G1 D.L.	UNIT	LOAD K/ft.
	SLAB	0.782
	HAUNCH	0.124
	GIRDER	0.211
	S.I.P. FORMS	0.026
	DIAPHRAGMS	0.009
	TOTAL	1.152

FASCIA GIRDERS G1 S.D.L.	UNIT	LOAD K/ft.
	BARRIER	0.150
	FENCING	0.003
	FUTURE W.S.	0.146
	TOTAL	0.299

INTERIOR GIRDERS G2 TO G4 D.L.	UNIT	LOAD K/ft.
	SLAB	0.960
	HAUNCH	0.041
	GIRDER	0.211
	S.I.P. FORMS	0.032
	DIAPHRAGMS	0.019
	TOTAL	1.263

INTERIOR GIRDERS G2 TO G4 S.D.L.	UNIT	LOAD K/ft.
	BARRIER	0.150
	FENCING	0.003
	FUTURE W.S.	0.146
	TOTAL	0.299

INTERIOR GIRDERS G5 TO G7 D.L.	UNIT	LOAD K/ft.
	SLAB	0.960
	HAUNCH	0.041
	GIRDER	0.211
	S.I.P. FORMS	0.032
	DIAPHRAGMS	0.019
	TOTAL	1.263

INTERIOR GIRDERS G5 TO G7 S.D.L.	UNIT	LOAD K/ft.
	BARRIER	0.238
	FENCING	0.000
	FUTURE W.S.	0.146
	TOTAL	0.384

INTERIOR GIRDERS G8 & G9 D.L.	UNIT	LOAD K/ft.
	SLAB	0.960
	HAUNCH	0.041
	GIRDER	0.211
	S.I.P. FORMS	0.032
	DIAPHRAGMS	0.019
	TOTAL	1.263

INTERIOR GIRDERS G8 & G9 S.D.L.	UNIT	LOAD K/ft.
	BARRIER	0.200
	FENCING	0.003
	FUTURE W.S.	0.146
	TOTAL	0.349

FASCIA GIRDERS G10 D.L.	UNIT	LOAD K/ft.
	SLAB	0.782
	HAUNCH	0.124
	GIRDER	0.211
	S.I.P. FORMS	0.026
	DIAPHRAGMS	0.009
	TOTAL	1.152

FASCIA GIRDERS G10 S.D.L.	UNIT	LOAD K/ft.
	BARRIER	0.200
	FENCING	0.003
	FUTURE W.S.	0.146
	TOTAL	0.349

ASSUMED LIVE LOAD = HL - 93 FOR LRFD

ALTERED ON:

AFFIXED ON: 08/10/2026

SIGNATURE:
STAMP:

SIGNATURE:
STAMP:

STATE OF NEW YORK
EDWIN TWISS
080650
LICENSED PROFESSIONAL ENGINEER

IT IS A VIOLATION OF LAW FOR ANY PERSON, UNLESS THEY ARE ACTING UNDER THE DIRECTION OF A LICENSED PROFESSIONAL ENGINEER, ARCHITECT, LANDSCAPE ARCHITECT, OR LAND SURVEYOR, TO ALTER AN ITEM IN ANY WAY. IF AN ITEM BEARING THE STAMP OF A LICENSED PROFESSIONAL IS ALTERED, THE ALTERING ENGINEER, ARCHITECT, LANDSCAPE ARCHITECT, OR LAND SURVEYOR SHALL STAMP THE DOCUMENT AND INCLUDE THE NOTATION "ALTERED BY" FOLLOWED BY THEIR SIGNATURE, THE DATE OF SUCH ALTERATION, AND A SPECIFIC DESCRIPTION OF THE ALTERATION.

REVISIONS

DATE	DESCRIPTION	BY	SYM.

NEW YORK STATE | Thruway Authority

AECOM

TITLE OF PROJECT
SUPERSTRUCTURE REPLACEMENT
GSP CONNECTOR OVER NYS THRUWAY

LOCATION OF PROJECT
BIN 5514049 (MP 23.53)

TITLE OF DRAWING
MOMENT, SHEAR, & DESIGN LOAD TABLES

CONTRACT NUMBER: TANY 26-23B

DATE: JULY 2026

DRAWING NUMBER: ST-41

AICE
CHECKED BY:
IW / MR / VZ
DRAFTED BY:
AICE
CHECKED BY:
IW / MR / VZ
DESIGNED BY:
RWL
DESIGN SUPERVISOR:

AICE | CHECKED BY: | IW / MR / VZ | DRAFTED BY: | AICE | CHECKED BY: | IW / MR / VZ | DESIGNED BY: | RWL | DESIGN SUPERVISOR:

CAMBER TABLE

		C.L. OF BRGS. BEG. ABUT.	0.1 L1	0.2 L1	0.3 L1	0.4 L1	0.5 L1	0.6 L1	0.7 L1	0.8 L1	0.9 L1	C.L. OF BRGS. PIER 1	0.1 L2	0.2 L2	0.3 L2	0.4 L2	0.5 L2	0.6 L2	0.7 L2	0.8 L2	0.9 L2	C.L. OF BRGS. PIER 2	0.1 L3	0.2 L3	0.3 L3	0.4 L3	0.5 L3	0.6 L3	0.7 L3	0.8 L3	0.9 L3	C.L. OF BRGS. PIER 3	0.1 L4	0.2 L4	0.3 L4	0.4 L4	0.5 L4	0.6 L4	0.7 L4	0.8 L4	0.9 L4	C.L. OF BRGS. END ABUT.
G1	I STEEL D.L. (ft.)	0	0.005	0.010	0.010	0.010	0.010	0.010	0.010	0.005	0.000	0.000	0.000	0.000	0.000	0.000	0.000	0.000	0.000	0.000	0.000	0.000	0.000	0.005	0.005	0.005	0.005	0.005	0.005	0.000	0.000	0.000	0.000	0.005	0.005	0.005	0.005	0.010	0.010	0.010	0.005	0.005	0
	II CONCRETE D.L. (ft.)	0	0.020	0.035	0.045	0.055	0.055	0.045	0.035	0.025	0.010	0.000	-0.005	-0.005	0.000	0.000	0.000	0.005	0.000	0.000	0.000	0.000	0.005	0.010	0.020	0.020	0.020	0.020	0.015	0.005	0.000	0.000	0.005	0.015	0.020	0.030	0.035	0.035	0.030	0.025	0.015	0
	III SUPERIMPOSED D.L. (ft.)	0	0.005	0.010	0.010	0.010	0.010	0.010	0.010	0.005	0.000	0.000	0.000	0.000	0.000	0.000	0.000	0.000	0.000	0.000	0.000	0.000	0.000	0.005	0.005	0.005	0.005	0.005	0.005	0.000	0.000	0.000	0.000	0.000	0.005	0.005	0.005	0.010	0.010	0.005	0.005	0.005	0
	IV VERTICAL CURVE (ft.)	0	0.000	0.000	0.000	0.000	0.000	0.000	0.000	0.000	0.000	0.000	0.000	0.000	0.000	0.000	0.000	0.000	0.000	0.000	0.000	0.000	0.000	0.000	0.000	0.000	0.000	0.000	0.000	0.000	0.000	0.000	0.000	0.000	0.000	0.000	0.000	0.000	0.000	0.000	0.000	0.000	0
	TOTAL = I + II + III + IV (ft.)	0	0.030	0.055	0.065	0.075	0.075	0.065	0.055	0.035	0.010	0.000	-0.005	-0.005	0.000	0.000	0.000	0.005	0.000	0.000	0.000	0.000	0.005	0.020	0.030	0.030	0.030	0.030	0.025	0.005	0.000	0.000	0.005	0.025	0.030	0.040	0.055	0.055	0.045	0.035	0.025	0
G2 TO G4	I STEEL D.L. (ft.)	0	0.005	0.010	0.010	0.015	0.010	0.010	0.010	0.005	0.000	0.000	0.000	0.000	0.000	0.000	0.000	0.000	0.000	0.000	0.000	0.000	0.000	0.005	0.005	0.005	0.005	0.005	0.005	0.000	0.000	0.000	0.000	0.005	0.005	0.005	0.005	0.010	0.010	0.010	0.005	0.005	0
	II CONCRETE D.L. (ft.)	0	0.020	0.040	0.055	0.060	0.060	0.055	0.040	0.025	0.010	0.000	-0.005	-0.005	0.000	0.000	0.005	0.005	0.000	0.000	0.000	0.000	0.005	0.015	0.020	0.025	0.025	0.020	0.015	0.010	0.000	0.000	0.005	0.015	0.025	0.035	0.040	0.040	0.035	0.025	0.015	0
	III SUPERIMPOSED D.L. (ft.)	0	0.005	0.005	0.010	0.010	0.010	0.010	0.010	0.005	0.000	0.000	0.000	0.000	0.000	0.000	0.000	0.000	0.000	0.000	0.000	0.000	0.000	0.000	0.005	0.005	0.005	0.005	0.005	0.000	0.000	0.000	0.000	0.005	0.005	0.005	0.010	0.010	0.005	0.005	0.005	0
	IV VERTICAL CURVE (ft.)	0	0.000	0.000	0.000	0.000	0.000	0.000	0.000	0.000	0.000	0.000	0.000	0.000	0.000	0.000	0.000	0.000	0.000	0.000	0.000	0.000	0.000	0.000	0.000	0.000	0.000	0.000	0.000	0.000	0.000	0.000	0.000	0.000	0.000	0.000	0.000	0.000	0.000	0.000	0.000	0.000	0
	TOTAL = I + II + III + IV (ft.)	0	0.030	0.055	0.075	0.085	0.080	0.075	0.060	0.035	0.010	0.000	-0.005	-0.005	0.000	0.000	0.005	0.005	0.000	0.000	0.000	0.000	0.005	0.020	0.030	0.035	0.035	0.030	0.025	0.010	0.000	0.000	0.005	0.025	0.035	0.045	0.060	0.060	0.050	0.035	0.025	0
G5 TO G7	I STEEL D.L. (ft.)	0	0.005	0.010	0.010	0.015	0.010	0.010	0.010	0.005	0.000	0.000	0.000	0.000	0.000	0.000	0.000	0.000	0.000	0.000	0.000	0.000	0.000	0.005	0.005	0.005	0.005	0.005	0.005	0.000	0.000	0.000	0.000	0.005	0.005	0.005	0.010	0.010	0.010	0.005	0.005	0
	II CONCRETE D.L. (ft.)	0	0.020	0.040	0.055	0.060	0.060	0.055	0.040	0.025	0.010	0.000	-0.005	-0.005	0.000	0.000	0.005	0.005	0.000	0.000	0.000	0.000	0.005	0.015	0.020	0.025	0.025	0.020	0.015	0.010	0.000	0.000	0.005	0.015	0.025	0.035	0.040	0.040	0.035	0.025	0.015	0
	III SUPERIMPOSED D.L. (ft.)	0	0.005	0.010	0.010	0.010	0.010	0.010	0.010	0.005	0.000	0.000	0.000	0.000	0.000	0.000	0.000	0.000	0.000	0.000	0.000	0.000	0.000	0.005	0.005	0.005	0.005	0.005	0.005	0.000	0.000	0.000	0.000	0.005	0.005	0.005	0.010	0.010	0.010	0.005	0.005	0
	IV VERTICAL CURVE (ft.)	0	0.000	0.000	0.000	0.000	0.000	0.000	0.000	0.000	0.000	0.000	0.000	0.000	0.000	0.000	0.000	0.000	0.000	0.000	0.000	0.000	0.000	0.000	0.000	0.000	0.000	0.000	0.000	0.000	0.000	0.000	0.000	0.000	0.000	0.000	0.000	0.000	0.000	0.000	0.000	0.000	0
	TOTAL = I + II + III + IV (ft.)	0	0.030	0.060	0.075	0.085	0.080	0.075	0.060	0.035	0.010	0.000	-0.005	-0.005	0.000	0.000	0.005	0.005	0.000	0.000	0.000	0.000	0.005	0.025	0.030	0.035	0.035	0.030	0.025	0.010	0.000	0.000	0.005	0.025	0.035	0.045	0.060	0.060	0.055	0.035	0.025	0
G8 TO G9	I STEEL D.L. (ft.)	0	0.005	0.010	0.010	0.015	0.010	0.010	0.010	0.005	0.000	0.000	0.000	0.000	0.000	0.000	0.000	0.000	0.000	0.000	0.000	0.000	0.000	0.005	0.005	0.005	0.005	0.005	0.005	0.000	0.000	0.000	0.000	0.005	0.005	0.005	0.010	0.010	0.010	0.005	0.005	0
	II CONCRETE D.L. (ft.)	0	0.020	0.040	0.055	0.060	0.060	0.055	0.040	0.025	0.010	0.000	-0.005	-0.005	0.000	0.000	0.005	0.005	0.000	0.000	0.000	0.000	0.005	0.015	0.020	0.025	0.025	0.020	0.015	0.010	0.000	0.000	0.005	0.015	0.025	0.035	0.040	0.040	0.035	0.025	0.015	0
	III SUPERIMPOSED D.L. (ft.)	0	0.005	0.005	0.010	0.010	0.010	0.010	0.005	0.005	0.000	0.000	0.000	0.000	0.000	0.000	0.000	0.000	0.000	0.000	0.000	0.000	0.000	0.000	0.005	0.005	0.005	0.005	0.000	0.000	0.000	0.000	0.000	0.005	0.005	0.005	0.005	0.005	0.005	0.005	0.005	0
	IV VERTICAL CURVE (ft.)	0	0.000	0.000	0.000	0.000	0.000	0.000	0.000	0.000	0.000	0.000	0.000	0.000	0.000	0.000	0.000	0.000	0.000	0.000	0.000	0.000	0.000	0.000	0.000	0.000	0.000	0.000	0.000	0.000	0.000	0.000	0.000	0.000	0.000	0.000	0.000	0.000	0.000	0.000	0.000	0.000	0
	TOTAL = I + II + III + IV (ft.)	0	0.030	0.055	0.075	0.085	0.080	0.075	0.055	0.035	0.010	0.000	-0.005	-0.005	0.000	0.000	0.005	0.005	0.000	0.000	0.000	0.000	0.005	0.020	0.030	0.035	0.035	0.030	0.020	0.010	0.000	0.000	0.005	0.025	0.035	0.045	0.055	0.055	0.050	0.035	0.025	0
G10	I STEEL D.L. (ft.)	0	0.005	0.010	0.010	0.010	0.010	0.010	0.010	0.005	0.000	0.000	0.000	0.000	0.000	0.000	0.000	0.000	0.000	0.000	0.000	0.000	0.000	0.005	0.005	0.005	0.005	0.005	0.005	0.000	0.000	0.000	0.000	0.005	0.005	0.005	0.010	0.010	0.010	0.005	0.005	0
	II CONCRETE D.L. (ft.)	0	0.020	0.035	0.045	0.055	0.055	0.045	0.035	0.025	0.010	0.000	-0.005	-0.005	0.000	0.000	0.000	0.005	0.000	0.000	0.000	0.000	0.005	0.010	0.020	0.020	0.020	0.020	0.015	0.005	0.000	0.000	0.005	0.015	0.020	0.030	0.035	0.035	0.030	0.025	0.015	0
	III SUPERIMPOSED D.L. (ft.)	0	0.005	0.005	0.010	0.010	0.010	0.010	0.005	0.005	0.000	0.000	0.000	0.000	0.000	0.000	0.000	0.000	0.000	0.000	0.000	0.000	0.000	0.000	0.005	0.005	0.005	0.005	0.005	0.000	0.000	0.000	0.000	0.005	0.005	0.005	0.005	0.005	0.005	0.005	0.005	0
	IV VERTICAL CURVE (ft.)	0	0.000	0.000	0.000	0.000	0.000	0.000	0.000	0.000	0.000	0.000	0.000	0.000	0.000	0.000	0.000	0.000	0.000	0.000	0.000	0.000	0.000	0.000	0.000	0.000	0.000	0.000	0.000	0.000	0.000	0.000	0.000	0.000	0.000	0.000	0.000	0.000	0.000	0.000	0.000	0.000	0
	TOTAL = I + II + III + IV (ft.)	0	0.030	0.050	0.065	0.075	0.075	0.065	0.050	0.035	0.010	0.000	-0.005	-0.005	0.000	0.000	0.000	0.005	0.000	0.000	0.000	0.000	0.005	0.015	0.030	0.030	0.030	0.030	0.025	0.005	0.000	0.000	0.005	0.025	0.030	0.040	0.050	0.050	0.045	0.035	0.025	0

CAMBER LOADS	
I STEEL D.L.	SELF LOAD (GIRDER, BOLTS, WELDS, & DIAPHRAGMS
II CONCRETE D.L.	CONCRETE DECK + HAUNCHES + SIP FORMS
III SUPERIMPOSED D.L.	CONCRETE BARRIERS + WEARING SURFACE + STAGE WZTC
IV VERTICAL CURVE	TOP OF STEEL ELEV. - REFERENCE LINE ELEV.

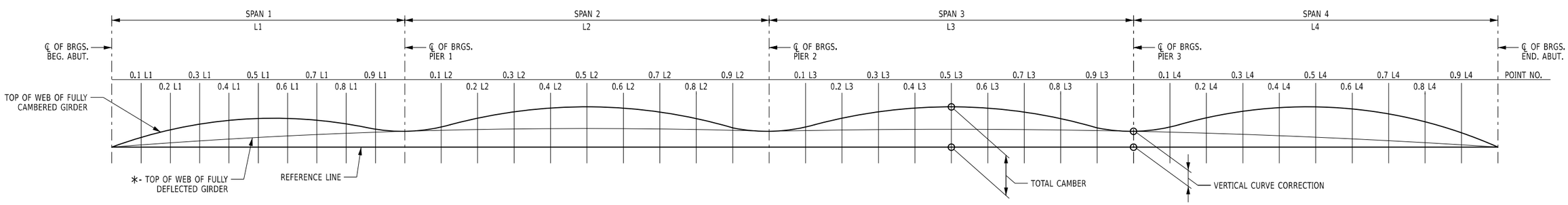

CAMBER DIAGRAM

NOTE:

∗- TOP OF WEB OF FULLY DEFLECTED GIRDER LINE WILL MATCH REFERENCE LINE ON BRIDGES THAT DO NOT HAVE A VERTICLA CURVE.

ALTERED ON:

AFFIXED ON: 08/10/2026

SIGNATURE:
STAMP:

SIGNATURE:
STAMP:

STATE OF NEW YORK · EDWIN TWISS · EXCELSIOR · 080650 · LICENSED PROFESSIONAL ENGINEER

IT IS A VIOLATION OF LAW FOR ANY PERSON, UNLESS THEY ARE ACTING UNDER THE DIRECTION OF A LICENSED PROFESSIONAL ENGINEER, ARCHITECT, LANDSCAPE ARCHITECT, OR LAND SURVEYOR, TO ALTER AN ITEM IN ANY WAY. IF AN ITEM BEARING THE STAMP OF A LICENSED PROFESSIONAL IS ALTERED, THE ALTERING ENGINEER, ARCHITECT, LANDSCAPE ARCHITECT, OR LAND SURVEYOR SHALL STAMP THE DOCUMENT AND INCLUDE THE NOTATION "ALTERED BY" FOLLOWED BY THEIR SIGNATURE, THE DATE OF SUCH ALTERATION, AND A SPECIFIC DESCRIPTION OF THE ALTERATION.

REVISIONS

DATE	DESCRIPTION	BY	SYM.

NEW YORK STATE | Thruway Authority

AECOM

TITLE OF PROJECT
SUPERSTRUCTURE REPLACEMENT
GSP CONNECTOR OVER NYS THRUWAY

LOCATION OF PROJECT
BIN 5514049 (MP 23.53)

TITLE OF DRAWING
CAMBER TABLE & DIAGRAM

CONTRACT NUMBER: TANY 26-23B

DATE: JULY 2026

DRAWING NUMBER: ST-42

HAUNCH TABLE

		C.L. OF BRGS. BEG. ABUT.	0.1 L1	0.2 L1	0.3 L1	0.4 L1	0.5 L1	0.6 L1	0.7 L1	0.8 L1	0.9 L1	C.L. OF BRGS. PIER 1	0.1 L2	0.2 L2	0.3 L2	0.4 L2	0.5 L2	0.6 L2	0.7 L2	0.8 L2	0.9 L2	C.L. OF BRGS. PIER 2	0.1 L3	0.2 L3	0.3 L3	0.4 L3	0.5 L3	0.6 L3	0.7 L3	0.8 L3	0.9 L3	C.L. OF BRGS. PIER 3	0.1 L4	0.2 L4	0.3 L4	0.4 L4	0.5 L4	0.6 L4	0.7 L4	0.8 L4	0.9 L4	C.L. OF BRGS. END ABUT.
G1	(A) REQ'D BOTTOM OF SLAB ELEVATION	464.49	464.46	464.43	464.39	464.36	464.33	464.29	464.26	464.23	464.20	464.16	464.13	464.10	464.07	464.04	464.01	463.98	463.95	463.93	463.90	463.87	463.83	463.80	463.77	463.73	463.70	463.67	463.63	463.60	463.57	463.53	463.50	463.47	463.44	463.41	463.38	463.35	463.32	463.28	463.25	463.22
	(B) TOP OF STEEL EL. (FIELD MEASURE)																																									
	(C) = (A) - (B)																																									
	(D) CONCRETE + S.D.L DEFLECTION	0.00	0.02	0.04	0.06	0.06	0.06	0.06	0.04	0.03	0.01	0.00	0.00	0.00	0.00	0.00	0.00	0.00	0.00	0.00	0.00	0.00	0.01	0.01	0.02	0.03	0.03	0.02	0.02	0.01	0.00	0.00	0.01	0.02	0.03	0.04	0.04	0.04	0.04	0.03	0.02	0.00
	(E) DEPTH OF HAUNCH REQ'D = (C) + (D) (ft.)																																									
G2	(A) REQ'D BOTTOM OF SLAB ELEVATION	464.65	464.62	464.58	464.55	464.52	464.48	464.45	464.42	464.39	464.35	464.32	464.29	464.26	464.23	464.20	464.17	464.14	464.11	464.08	464.05	464.02	463.99	463.96	463.92	463.89	463.86	463.82	463.79	463.76	463.72	463.69	463.66	463.63	463.60	463.57	463.54	463.50	463.47	463.44	463.41	463.38
	(B) TOP OF STEEL EL. (FIELD MEASURE)																																									
	(C) = (A) - (B)																																									
	(D) CONCRETE + S.D.L DEFLECTION	0.00	0.03	0.05	0.06	0.07	0.07	0.06	0.05	0.03	0.01	0.00	0.00	0.00	0.00	0.00	0.00	0.00	0.00	0.00	0.00	0.00	0.01	0.02	0.02	0.03	0.03	0.03	0.02	0.01	0.00	0.00	0.01	0.02	0.03	0.04	0.05	0.05	0.04	0.03	0.02	0.00
	(E) DEPTH OF HAUNCH REQ'D = (C) + (D) (ft.)																																									
G3	(A) REQ'D BOTTOM OF SLAB ELEVATION	464.81	464.77	464.74	464.71	464.68	464.64	464.61	464.58	464.54	464.51	464.48	464.45	464.42	464.39	464.36	464.33	464.30	464.27	464.24	464.21	464.18	464.15	464.11	464.08	464.05	464.02	463.98	463.95	463.92	463.88	463.85	463.82	463.79	463.76	463.72	463.69	463.66	463.63	463.60	463.57	463.54
	(B) TOP OF STEEL EL. (FIELD MEASURE)																																									
	(C) = (A) - (B)																																									
	(D) CONCRETE + S.D.L DEFLECTION	0.00	0.03	0.05	0.06	0.07	0.07	0.06	0.05	0.03	0.01	0.00	0.00	0.00	0.00	0.00	0.00	0.00	0.00	0.00	0.00	0.00	0.01	0.02	0.02	0.03	0.03	0.03	0.02	0.01	0.00	0.00	0.01	0.02	0.03	0.04	0.05	0.05	0.04	0.03	0.02	0.00
	(E) DEPTH OF HAUNCH REQ'D = (C) + (D) (ft.)																																									
G4	(A) REQ'D BOTTOM OF SLAB ELEVATION	464.91	464.88	464.85	464.81	464.78	464.75	464.72	464.68	464.65	464.62	464.58	464.55	464.52	464.50	464.47	464.44	464.41	464.38	464.35	464.32	464.29	464.25	464.22	464.19	464.15	464.12	464.09	464.05	464.02	463.99	463.96	463.92	463.89	463.86	463.83	463.80	463.77	463.74	463.71	463.67	463.64
	(B) TOP OF STEEL EL. (FIELD MEASURE)																																									
	(C) = (A) - (B)																																									
	(D) CONCRETE + S.D.L DEFLECTION	0.00	0.03	0.05	0.06	0.07	0.07	0.06	0.05	0.03	0.01	0.00	0.00	0.00	0.00	0.00	0.00	0.00	0.00	0.00	0.00	0.00	0.01	0.02	0.02	0.03	0.03	0.03	0.02	0.01	0.00	0.00	0.01	0.02	0.03	0.04	0.05	0.05	0.04	0.03	0.02	0.00
	(E) DEPTH OF HAUNCH REQ'D = (C) + (D) (ft.)																																									
G5	(A) REQ'D BOTTOM OF SLAB ELEVATION	464.75	464.71	464.68	464.65	464.62	464.58	464.55	464.52	464.48	464.45	464.42	464.39	464.36	464.33	464.30	464.27	464.24	464.21	464.18	464.15	464.12	464.09	464.06	464.02	463.99	463.96	463.92	463.89	463.86	463.82	463.79	463.76	463.73	463.70	463.66	463.63	463.60	463.57	463.54	463.51	463.48
	(B) TOP OF STEEL EL. (FIELD MEASURE)																																									
	(C) = (A) - (B)																																									
	(D) CONCRETE + S.D.L DEFLECTION	0.00	0.03	0.05	0.06	0.07	0.07	0.06	0.05	0.03	0.01	0.00	0.00	0.00	0.00	0.00	0.00	0.00	0.00	0.00	0.00	0.00	0.01	0.02	0.02	0.03	0.03	0.03	0.02	0.01	0.00	0.00	0.01	0.02	0.03	0.04	0.05	0.05	0.04	0.03	0.02	0.00
	(E) DEPTH OF HAUNCH REQ'D = (C) + (D) (ft.)																																									
G6	(A) REQ'D BOTTOM OF SLAB ELEVATION	464.58	464.55	464.52	464.48	464.45	464.42	464.38	464.35	464.32	464.29	464.25	464.22	464.19	464.16	464.13	464.10	464.07	464.04	464.02	463.99	463.96	463.92	463.89	463.86	463.82	463.79	463.76	463.72	463.69	463.66	463.62	463.59	463.56	463.53	463.50	463.47	463.44	463.41	463.37	463.34	463.31
	(B) TOP OF STEEL EL. (FIELD MEASURE)																																									
	(C) = (A) - (B)																																									
	(D) CONCRETE + S.D.L DEFLECTION	0.00	0.03	0.05	0.06	0.07	0.07	0.06	0.05	0.03	0.01	0.00	0.00	0.00	0.00	0.00	0.00	0.00	0.00	0.00	0.00	0.00	0.01	0.02	0.02	0.03	0.03	0.03	0.02	0.01	0.00	0.00	0.01	0.02	0.03	0.04	0.05	0.05	0.04	0.03	0.02	0.00
	(E) DEPTH OF HAUNCH REQ'D = (C) + (D) (ft.)																																									
G7	(A) REQ'D BOTTOM OF SLAB ELEVATION	464.54	464.51	464.48	464.44	464.41	464.38	464.34	464.31	464.28	464.25	464.21	464.18	464.15	464.12	464.09	464.06	464.03	464.00	463.97	463.94	463.92	463.88	463.85	463.82	463.78	463.75	463.72	463.68	463.65	463.62	463.58	463.55	463.52	463.49	463.46	463.43	463.40	463.36	463.33	463.30	463.27
	(B) TOP OF STEEL EL. (FIELD MEASURE)																																									
	(C) = (A) - (B)																																									
	(D) CONCRETE + S.D.L DEFLECTION	0.00	0.03	0.05	0.06	0.07	0.07	0.06	0.05	0.03	0.01	0.00	0.00	0.00	0.00	0.00	0.00	0.00	0.00	0.00	0.00	0.00	0.01	0.02	0.02	0.03	0.03	0.03	0.02	0.01	0.00	0.00	0.01	0.02	0.03	0.04	0.05	0.05	0.04	0.03	0.02	0.00
	(E) DEPTH OF HAUNCH REQ'D = (C) + (D) (ft.)																																									
G8	(A) REQ'D BOTTOM OF SLAB ELEVATION	464.51	464.47	464.44	464.41	464.38	464.34	464.31	464.28	464.24	464.21	464.18	464.15	464.12	464.09	464.06	464.03	464.00	463.97	463.94	463.91	463.88	463.85	463.81	463.78	463.75	463.72	463.68	463.65	463.62	463.58	463.55	463.52	463.49	463.46	463.42	463.39	463.36	463.33	463.30	463.27	463.24
	(B) TOP OF STEEL EL. (FIELD MEASURE)																																									
	(C) = (A) - (B)																																									
	(D) CONCRETE + S.D.L DEFLECTION	0.00	0.02	0.05	0.06	0.07	0.07	0.06	0.05	0.03	0.01	0.00	0.00	0.00	0.00	0.00	0.00	0.00	0.00	0.00	0.00	0.00	0.01	0.02	0.02	0.03	0.03	0.03	0.02	0.01	0.00	0.00	0.01	0.02	0.03	0.04	0.05	0.05	0.04	0.03	0.02	0.00
	(E) DEPTH OF HAUNCH REQ'D = (C) + (D) (ft.)																																									
G9	(A) REQ'D BOTTOM OF SLAB ELEVATION	464.34	464.31	464.28	464.24	464.21	464.18	464.14	464.11	464.08	464.05	464.01	463.98	463.95	463.92	463.89	463.86	463.83	463.80	463.77	463.75	463.72	463.68	463.65	463.62	463.58	463.55	463.52	463.48	463.45	463.42	463.38	463.35	463.32	463.29	463.26	463.23	463.20	463.17	463.13	463.10	463.07
	(B) TOP OF STEEL EL. (FIELD MEASURE)																																									
	(C) = (A) - (B)																																									
	(D) CONCRETE + S.D.L DEFLECTION	0.00	0.02	0.05	0.06	0.07	0.07	0.06	0.05	0.03	0.01	0.00	0.00	0.00	0.00	0.00	0.00	0.00	0.00	0.00	0.00	0.00	0.01	0.02	0.02	0.03	0.03	0.03	0.02	0.01	0.00	0.00	0.01	0.02	0.03	0.04	0.05	0.05	0.04	0.03	0.02	0.00
	(E) DEPTH OF HAUNCH REQ'D = (C) + (D) (ft.)																																									
G10	(A) REQ'D BOTTOM OF SLAB ELEVATION	464.18	464.14	464.11	464.08	464.04	464.01	463.98	463.95	463.91	463.88	463.85	463.82	463.79	463.76	463.73	463.70	463.67	463.64	463.61	463.58	463.55	463.52	463.48	463.45	463.42	463.38	463.35	463.32	463.28	463.25	463.22	463.19	463.16	463.12	463.09	463.06	463.03	463.00	462.97	462.94	462.91
	(B) TOP OF STEEL EL. (FIELD MEASURE)																																									
	(C) = (A) - (B)																																									
	(D) CONCRETE + S.D.L DEFLECTION	0.00	0.02	0.04	0.06	0.06	0.06	0.06	0.04	0.03	0.01	0.00	0.00	0.00	0.00	0.00	0.00	0.00	0.00	0.00	0.00	0.00	0.01	0.01	0.02	0.03	0.03	0.02	0.02	0.01	0.00	0.00	0.01	0.02	0.03	0.04	0.04	0.04	0.04	0.03	0.02	0.00
	(E) DEPTH OF HAUNCH REQ'D = (C) + (D) (ft.)																																									

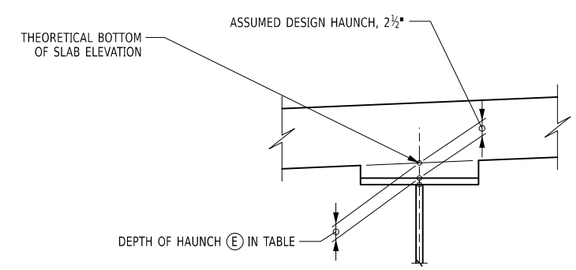

FLANGE WIDTH ≥ 1'-4"

GIRDER HAUNCH DETAIL

NOTE:
THE CONTRACTOR SHALL PROVIDE THE ENGINEER WITH THE COMPLETED HAUNCH TABLE PRIOR TO SETTING THE BOTTOM FORMWORK OF THE DECK.

DEFLECTIONS ASSUME STAGE 2 FASCIA BARRIER IS INSTALLED PRIOR TO THE PLACEMENT OF THE CLOSURE POUR.

ALTERED ON:

AFFIXED ON: 08/10/2026

SIGNATURE:
STAMP:

SIGNATURE:
STAMP:

STATE OF NEW YORK · EDWIN TWISS · EXCELSIOR · 080650 · LICENSED PROFESSIONAL ENGINEER

IT IS A VIOLATION OF LAW FOR ANY PERSON, UNLESS THEY ARE ACTING UNDER THE DIRECTION OF A LICENSED PROFESSIONAL ENGINEER, ARCHITECT, LANDSCAPE ARCHITECT, OR LAND SURVEYOR, TO ALTER AN ITEM IN ANY WAY. IF AN ITEM BEARING THE STAMP OF A LICENSED PROFESSIONAL IS ALTERED, THE ALTERING ENGINEER, ARCHITECT, LANDSCAPE ARCHITECT, OR LAND SURVEYOR SHALL STAMP THE DOCUMENT AND INCLUDE THE NOTATION "ALTERED BY" FOLLOWED BY THEIR SIGNATURE, THE DATE OF SUCH ALTERATION, AND A SPECIFIC DESCRIPTION OF THE ALTERATION.

REVISIONS

DATE	DESCRIPTION	BY	SYM.

NEW YORK STATE | Thruway Authority

AECOM

TITLE OF PROJECT
SUPERSTRUCTURE REPLACEMENT
GSP CONNECTOR OVER NYS THRUWAY

LOCATION OF PROJECT
BIN 5514049 (MP 23.53)

TITLE OF DRAWING
HAUNCH TABLE AND DETAILS

CONTRACT NUMBER: TANY 26-23B

DATE: JULY 2026

DRAWING NUMBER: ST-43

AICE · CHECKED BY: · IW / MR / VZ · DRAFTED BY: · AICE · CHECKED BY: · IW / MR / VZ · DESIGNED BY: · RWL · DESIGN SUPERVISOR:

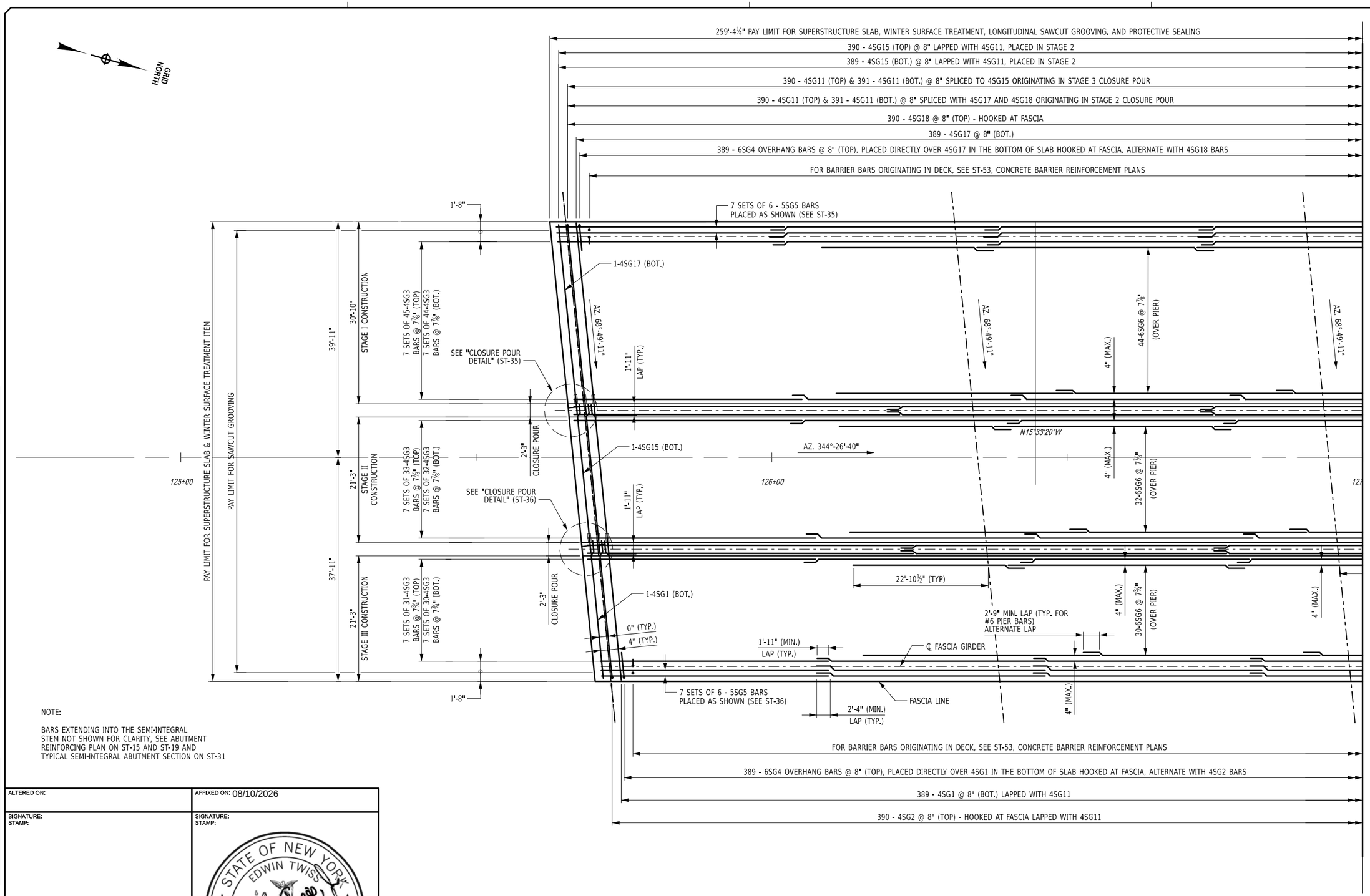

NOTE:

BARS EXTENDING INTO THE SEMI-INTEGRAL STEM NOT SHOWN FOR CLARITY, SEE ABUTMENT REINFORCING PLAN ON ST-15 AND ST-19 AND TYPICAL SEMI-INTEGRAL ABUTMENT SECTION ON ST-31

DESIGN SUPERVISOR: RWL | DESIGNED BY: IW / MR / VZ | CHECKED BY: AICE | DRAFTED BY: IW / MR / VZ | CHECKED BY: AICE

ALTERED ON:

AFFIXED ON: 08/10/2026

SIGNATURE:
STAMP:

SIGNATURE:
STAMP:

STATE OF NEW YORK · EDWIN TWISS · EXCELSIOR · 080650 · LICENSED PROFESSIONAL ENGINEER

IT IS A VIOLATION OF LAW FOR ANY PERSON, UNLESS THEY ARE ACTING UNDER THE DIRECTION OF A LICENSED PROFESSIONAL ENGINEER, ARCHITECT, LANDSCAPE ARCHITECT, OR LAND SURVEYOR, TO ALTER AN ITEM IN ANY WAY. IF AN ITEM BEARING THE STAMP OF A LICENSED PROFESSIONAL IS ALTERED, THE ALTERING ENGINEER, ARCHITECT, LANDSCAPE ARCHITECT, OR LAND SURVEYOR SHALL STAMP THE DOCUMENT AND INCLUDE THE NOTATION "ALTERED BY" FOLLOWED BY THEIR SIGNATURE, THE DATE OF SUCH ALTERATION, AND A SPECIFIC DESCRIPTION OF THE ALTERATION.

REVISIONS

DATE	DESCRIPTION	BY	SYM.

NEW YORK STATE | Thruway Authority

AECOM

TITLE OF PROJECT
SUPERSTRUCTURE REPLACEMENT
GSP CONNECTOR OVER NYS THRUWAY

LOCATION OF PROJECT
BIN 5514049 (MP 23.53)

TITLE OF DRAWING
SUPERSTRUCTURE SLAB REINFORCEMENT PLAN
(1 OF 2)

CONTRACT NUMBER: TANY 26-23B

DATE: JULY 2026

DRAWING NUMBER: ST-44

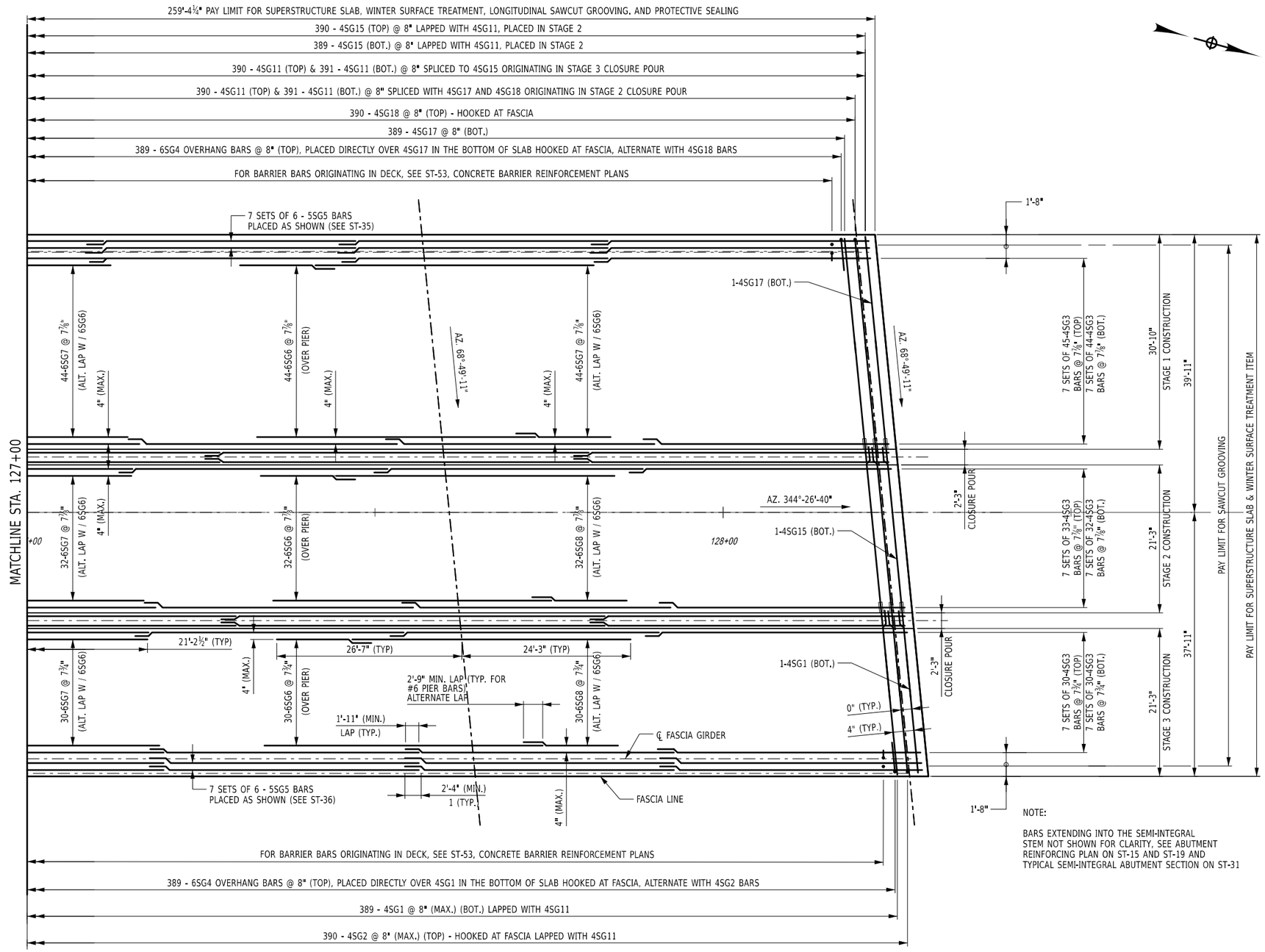

NOTE:

BARS EXTENDING INTO THE SEMI-INTEGRAL STEM NOT SHOWN FOR CLARITY, SEE ABUTMENT REINFORCING PLAN ON ST-15 AND ST-19 AND TYPICAL SEMI-INTEGRAL ABUTMENT SECTION ON ST-31

DESIGN SUPERVISOR: RWL | DESIGNED BY: IW / MR / VZ | CHECKED BY: IW / MR / VZ | DRAFTED BY: AICE | CHECKED BY: AICE | AICE

ALTERED ON:	AFFIXED ON: 08/10/2026
SIGNATURE: STAMP:	SIGNATURE: STAMP: STATE OF NEW YORK · EDWIN TWISS · 080650 · LICENSED PROFESSIONAL ENGINEER

IT IS A VIOLATION OF LAW FOR ANY PERSON, UNLESS THEY ARE ACTING UNDER THE DIRECTION OF A LICENSED PROFESSIONAL ENGINEER, ARCHITECT, LANDSCAPE ARCHITECT, OR LAND SURVEYOR, TO ALTER AN ITEM IN ANY WAY. IF AN ITEM BEARING THE STAMP OF A LICENSED PROFESSIONAL IS ALTERED, THE ALTERING ENGINEER, ARCHITECT, LANDSCAPE ARCHITECT, OR LAND SURVEYOR SHALL STAMP THE DOCUMENT AND INCLUDE THE NOTATION "ALTERED BY" FOLLOWED BY THEIR SIGNATURE, THE DATE OF SUCH ALTERATION, AND A SPECIFIC DESCRIPTION OF THE ALTERATION.

REVISIONS

DATE	DESCRIPTION	BY	SYM.

NEW YORK STATE | Thruway Authority

AECOM

TITLE OF PROJECT: SUPERSTRUCTURE REPLACEMENT GSP CONNECTOR OVER NYS THRUWAY

LOCATION OF PROJECT: BIN 5514049 (MP 23.53)

TITLE OF DRAWING: SUPERSTRUCTURE SLAB REINFORCEMENT PLAN (2 OF 2)

CONTRACT NUMBER: TANY 26-23B

DATE: JULY 2026

DRAWING NUMBER: ST-45

DECK PLACEMENT NOTES

1. CONCRETE PLACEMENT AND FINISHING OPERATIONS SHALL BE PERFORMED AS RAPIDLY AS POSSIBLE. THE ENGINEER MAY DIRECT THE CONTRACTOR TO STOP PLACEMENT OPERATIONS AT ANY TIME IF, IN THE ENGINEER'S OPINION, CONCRETE PLACED DURING THE PLACEMENT HAS STARTED TO SET, OR IS ABOUT TO SET, AND FURTHER PLACEMENT OF CONCRETE WILL CAUSE DEFLECTION CRACKING.
2. LONGITUDINAL CONSTRUCTION JOINTS NOT SHOWN IN THE PLANS ARE NOT PERMITTED.
3. THE CONTRACTOR SHALL OPERATE FINISHING MACHINE AS CLOSE TO THE SKEW ANGLE AS PRACTICABLE FOR SKEW ANGLES BETWEEN 0° AND 35°.
4. THE CONTRACTOR SHALL PLACE WET BURLAP CURING BLANKETS ON THE CONCRETE DECK WITHIN 30 MINUTES OF THE CONCRETE BEING DEPOSITED INTO THE FORMS OR 5 MINUTES AFTER FINISHING, WHICHEVER COMES FIRST. THE PLACEMENT OF THE TURF DRAG TEXTURE SHALL NOT INTERFERE WITH THESE REQUIREMENTS.
5. IF THE CONTRACTOR'S DECK PLACEMENT OPERATION IS STOPPED PRIOR TO COMPLETION, WHETHER BY THE CONTRACTOR'S DECISION OR BY DIRECTION OF THE ENGINEER, THE CONTRACTOR SHALL PROVIDE A FINISHED DECK GRADE WHICH MATCHES THE PLANNED PROFILE. ANY SUBSEQUENT REVISIONS TO DECK FORMS MADE NECESSARY BY SUCH ACTION SHALL BE AT NO COST TO THE STATE.
6. THERE WILL BE NO EXCEPTIONS MADE TO THE POURING SEQUENCE SHOWN IN THE CONTRACT PLANS.
7. CONSTRUCTION JOINTS SHALL BE PLACED PARALLEL TO THE SKEW. DECK CONCRETE SHALL BE PLACED SO THAT THE LEADING EDGE IS PARALLEL TO THE SKEW. FINISHING MACHINE(S) SHALL BE OPERATED AS CLOSE TO THE SKEW ANGLE AS PRACTICABLE. TEXTURING MAY BE DONE LONGITUDINAL, TRANSVERSE OR PARALLEL TO THE ALIGNMENT OF THE FINISHING MACHINE.
8. ALL AREAS SHOWN ON THE PLANS AS "PLACEMENT 1" SHALL BE PLACED DURING THE INITIAL CONTINUOUS WORK PERIOD. SUBSEQUENT PLACEMENTS WILL NOT BE PERMITTED UNTIL 72 HOURS OF ACCEPTABLE CURING AFTER THE COMPLETION OF THE PREVIOUS PLACEMENT HAS BEEN ACHIEVED.
9. THE CONTRACTOR MAY DIVIDE PLACEMENT 2 INTO SEPARATE POURS. THE 72 HOUR WAITING PERIOD BETWEEN PLACEMENTS SHALL BE OBSERVED.

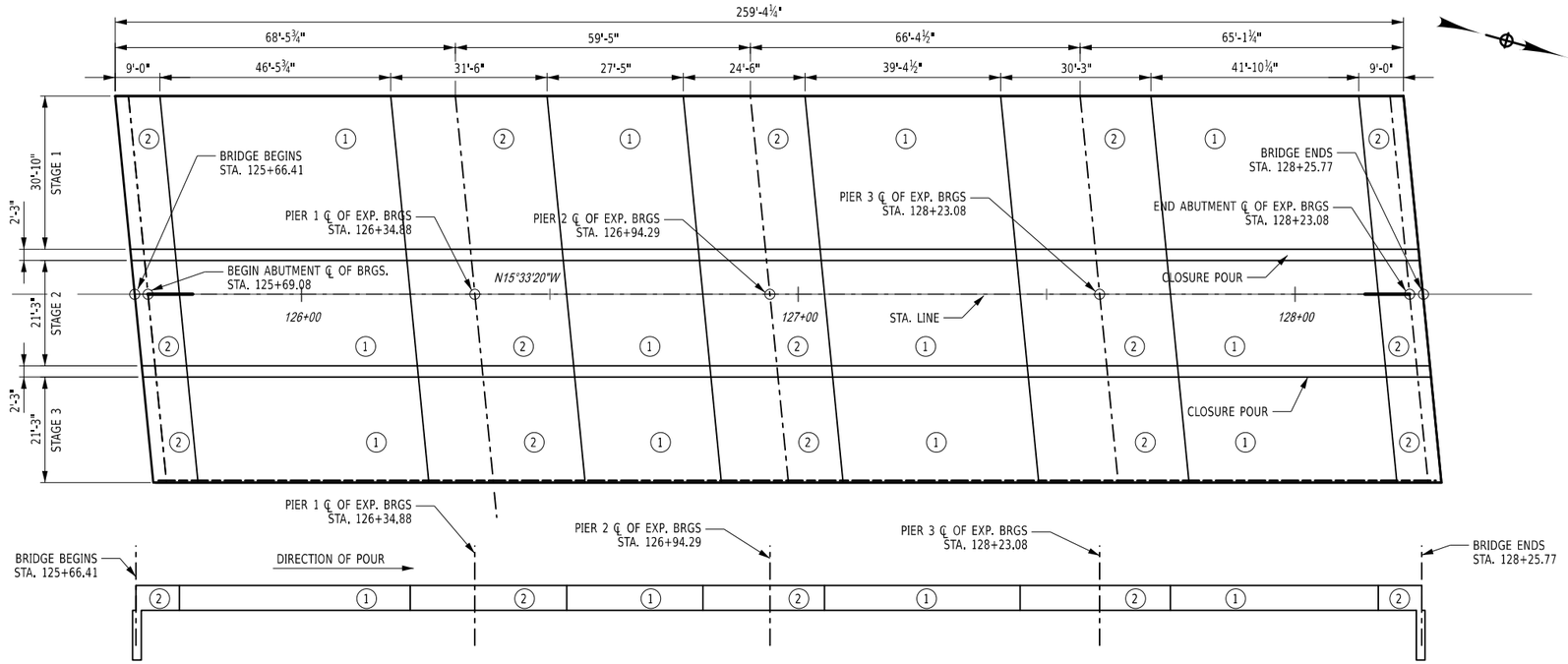

POUR SEQUENCE
NOT TO SCALE

FORM UNIT NOTES

1. THE COST OF THE FORMING SYSTEMS SHOWN ON THIS DRAWING SHALL BE INCLUDED IN THE UNIT PRICE BID FOR THE SUPERSTRUCTURE SLAB CONCRETE ITEM.
2. TACK WELDS SHALL BE ALLOWED IN THE COMPRESSION AREA OF THE STRINGER'S TOP FLANGE ONLY. FOR CONTINUOUS STRUCTURES, SEE STRINGER DETAILS FOR LIMITS OF TENSION ZONES FOR THE TOP FLANGE. WELDING SHALL CONFORM TO SECTION 7 OF THE N.Y.S. STEEL CONSTRUCTION MANUAL. (⅛" DIA., E7018 OR E8018-C3 ELECTRODES, PROPERLY CONDITIONED, SHALL BE USED.)
3. THERE SHALL BE NO WELDING TO GALVANIZED OR METALIZED GIRDER SURFACES FOR THE ATTACHMENT OF FORMING DEVICES.
4. THE SUPPORT ANGLES AND/OR ZEES SHALL BE GALVANIZED IN ACCORDANCE WITH THE MATERIAL SPECIFICATION 719-01.

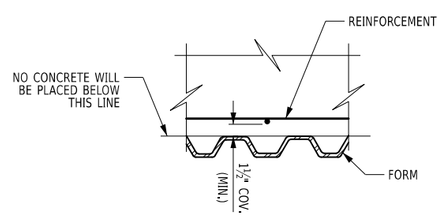

SECTION B-B

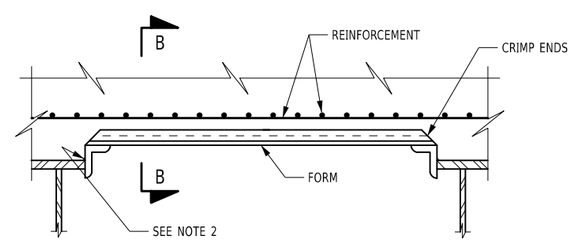

PERMANENT CORRUGATED METAL FORM DETAIL

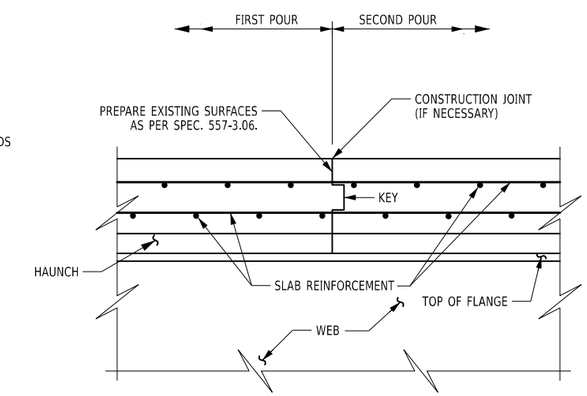

TRANSVERSE CONSTRUCTION JOINT IN SLAB

ALTERED ON:	AFFIXED ON: 08/10/2026
SIGNATURE: STAMP:	SIGNATURE: STAMP: STATE OF NEW YORK · EDWIN TWISS · EXCELSIOR · 080650 · LICENSED PROFESSIONAL ENGINEER

IT IS A VIOLATION OF LAW FOR ANY PERSON, UNLESS THEY ARE ACTING UNDER THE DIRECTION OF A LICENSED PROFESSIONAL ENGINEER, ARCHITECT, LANDSCAPE ARCHITECT, OR LAND SURVEYOR, TO ALTER AN ITEM IN ANY WAY. IF AN ITEM BEARING THE STAMP OF A LICENSED PROFESSIONAL IS ALTERED, THE ALTERING ENGINEER, ARCHITECT, LANDSCAPE ARCHITECT, OR LAND SURVEYOR SHALL STAMP THE DOCUMENT AND INCLUDE THE NOTATION "ALTERED BY" FOLLOWED BY THEIR SIGNATURE, THE DATE OF SUCH ALTERATION, AND A SPECIFIC DESCRIPTION OF THE ALTERATION.

REVISIONS

DATE	DESCRIPTION	BY	SYM.

NEW YORK STATE | Thruway Authority

AECOM

TITLE OF PROJECT: SUPERSTRUCTURE REPLACEMENT GSP CONNECTOR OVER NYS THRUWAY	CONTRACT NUMBER: TANY 26-23B
LOCATION OF PROJECT: BIN 5514049 (MP 23.53)	DATE: JULY 2026
TITLE OF DRAWING: SLAB POUR SEQUENCE	DRAWING NUMBER: ST-46

DESIGN SUPERVISOR: RWL | DRAFTED BY: IW / MR / VZ | DESIGNED BY: IW / MR / VZ | CHECKED BY: AICE | CHECKED BY: AICE

BEGIN APPROACH SLAB TABLE					
	PLACEMENT	CONCRETE (SY) ITEM 557.1011	WINTER SURFACE TREATMENT (SY) ITEM 557.29	LONGITUDINAL SAWCUT GROOVING (SY) ITEM 558.02	PROTECTIVE SEALER (SF) ITEM 559.01
STAGE 1	APPROACH SLAB	61.0	61.0	56	508
	SLEEPER SLAB	19.6	6.4	7	59
STAGE 2	APPROACH SLAB	52.2	52.2	48	430
	SLEEPER SLAB	15.7	5.2	5	43
STAGE 3	APPROACH SLAB	58.3	58.3	55	491
	SLEEPER SLAB	15.7	5.2	5	44

NOTES:

A. TO PERMIT UNHINDERED LONGITUDINAL MOVEMENT OF SLAB, THE SURFACE OF THE SUBBASE COURSE MUST BE ACCURATELY CONTROLLED TO FOLLOW AND BE PARALLEL TO THE ROADWAY GRADE AND CROSS SLOPE. POLYETHYLENE CURING COVERS (WHITE OR OPAQUE) IN ACCORDANCE WITH MATERIAL SPECIFICATION SUBSECTION 711-04 SHALL BE PLACED ON THE FINISHED SUBBASE COURSE THE FULL WIDTH OF THE APPROACH SLAB PRIOR TO PLACEMENT OF THE REINFORCEMENT. THE CURING COVERS SHALL BE 0.004 in. THICK, AND LAPS SHALL BE 2 ft. MINIMUM.

B. FILL THE RECESS WITH A STRUCTURAL JOINT MATERIAL, LIQUID SEALANT, FROM THE DEPARTMENT'S APPROVED LIST. THE MANUFACTURER'S RECOMMENDATIONS SHALL BE FOLLOWED FOR THOSE SEALANTS THAT REQUIRES A PRIMER. THE CONCRETE SHALL CURE FOR MINIMUM OF 7 DAYS BEFORE JOINT IS SEALED. SEALING SHALL ONLY BE PERFORMED WHEN THE CONCRETE TEMPERATURE IS 40°F OR ABOVE. BOTH JOINT FACES SHALL BE SAND BLASTED TO ROUGHEN THE SURFACE AND TO REMOVE ALL SURFACE MOISTURE AND ANY OTHER MATERIAL THAT MAY INTERFERE WITH BOND.

C. TOP SURFACES OF STRUCTURAL SLABS, APPROACH SLABS, AND SLEEPER SLABS SHALL BE GROOVED UNDER THE SAWCUT GROOVING OF STRUCTURAL SLAB ITEM.

D. IF A MODULAR JOINT SYSTEM IS USED, CONCRETE FURNISHED AND PLACED IN THE RECESSES FOR INSTALLING THE JOINT SYSTEM SHALL COMPLY WITH THE SPECIFICATIONS FOR THE APPROACH SLAB ITEM, EXCEPT THAT MACHINE FINISHING WILL NOT BE REQUIRED. NO ADDITIONAL PAYMENT WILL BE MADE FOR FURNISHING AND PLACING THIS CONCRETE AS THIS QUANTITY LIES WITHIN THE LIMITS OF THE AREA TO BE PAID FOR UNDER THE APPROACH SLAB ITEM. IF AN ARMORLESS JOINT IS USED, PAYMENT FOR THE ELASTOMERIC CONCRETE HEADERS SHALL BE INCLUDED IN THE ITEM FOR THE JOINT SYSTEM. THE JOINT SYSTEM SHALL BE PAID FOR UNDER ITS APPROPRIATE ITEM.

E. COMPRESSED SYNTHETIC SHEET GASKET (TREATED BOTH SIDES), MATERIAL SPECIFICATION 728-06, TWO 0.06 in. THICK SHEETS. PRICE WILL BE INCLUDED IN THE UNIT PRICE BID FOR THE APPROACH SLAB ITEM.

GENERAL NOTES:

ALL REINFORCEMENT SHALL HAVE 3" COVER UNLESS OTHERWISE NOTED.

(G) DENOTES GALVANIZED REINFORCEMENT

DETAILS ON THE DRAWINGS LABELED AS "NOT TO SCALE" ARE INTENTIONALLY DRAWN NOT TO SCALE FOR VISUAL CLARITY. ALL OTHER DETAILS, FOR WHICH NO SCALE IS SHOWN, ARE DRAWN PROPORTIONAL AND ARE FULLY DIMENSIONED.

FOR SECTION A-A, SEE DRAWING NUMBER ST-49.

SEE ST-53 THRU ST-55 FOR FURTHER DETAILS ON BARRIER BARS ORIGINATING IN THE APPROACH SLAB

*CONTRACTOR SHALL FIELD VERIFY DIMENSION IN FIELD BASED ON THE APPROACH SLAB EXTENDING 6" BEYOND THE EXISTING FACE OF THE BAL WINGWALL.

5 0 5 10 15 20'
1" = 10'

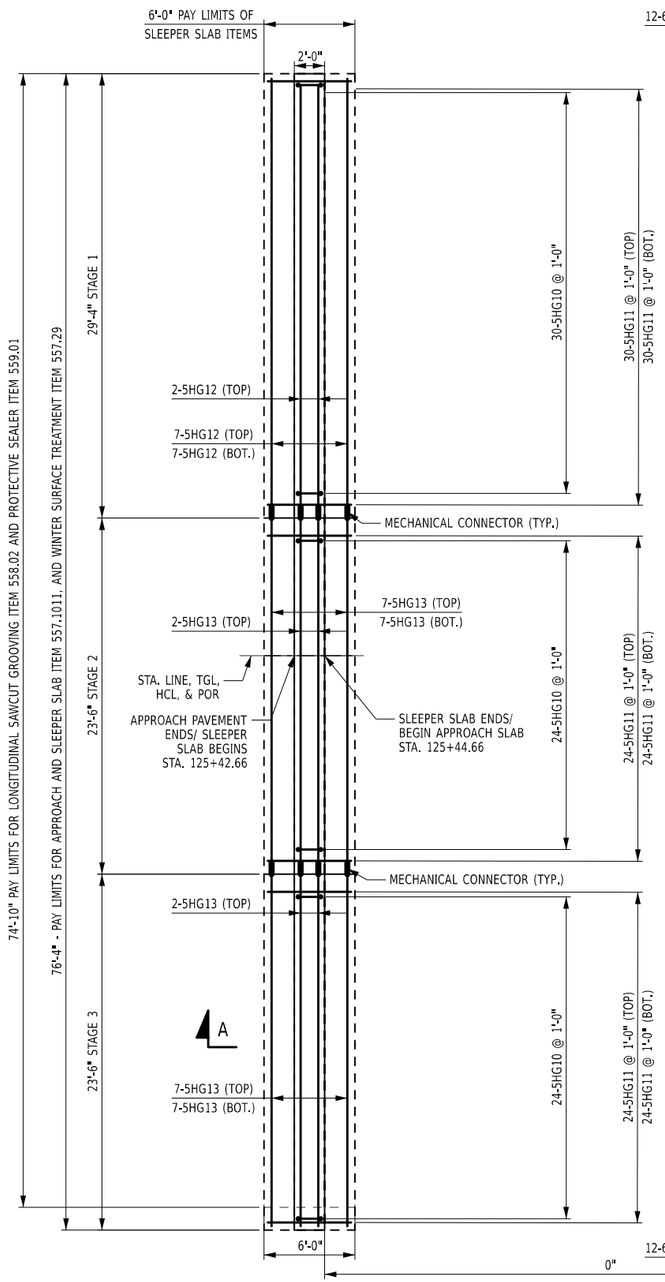

BEGIN SLEEPER SLAB REINFORCEMENT PLAN
NOT TO SCALE

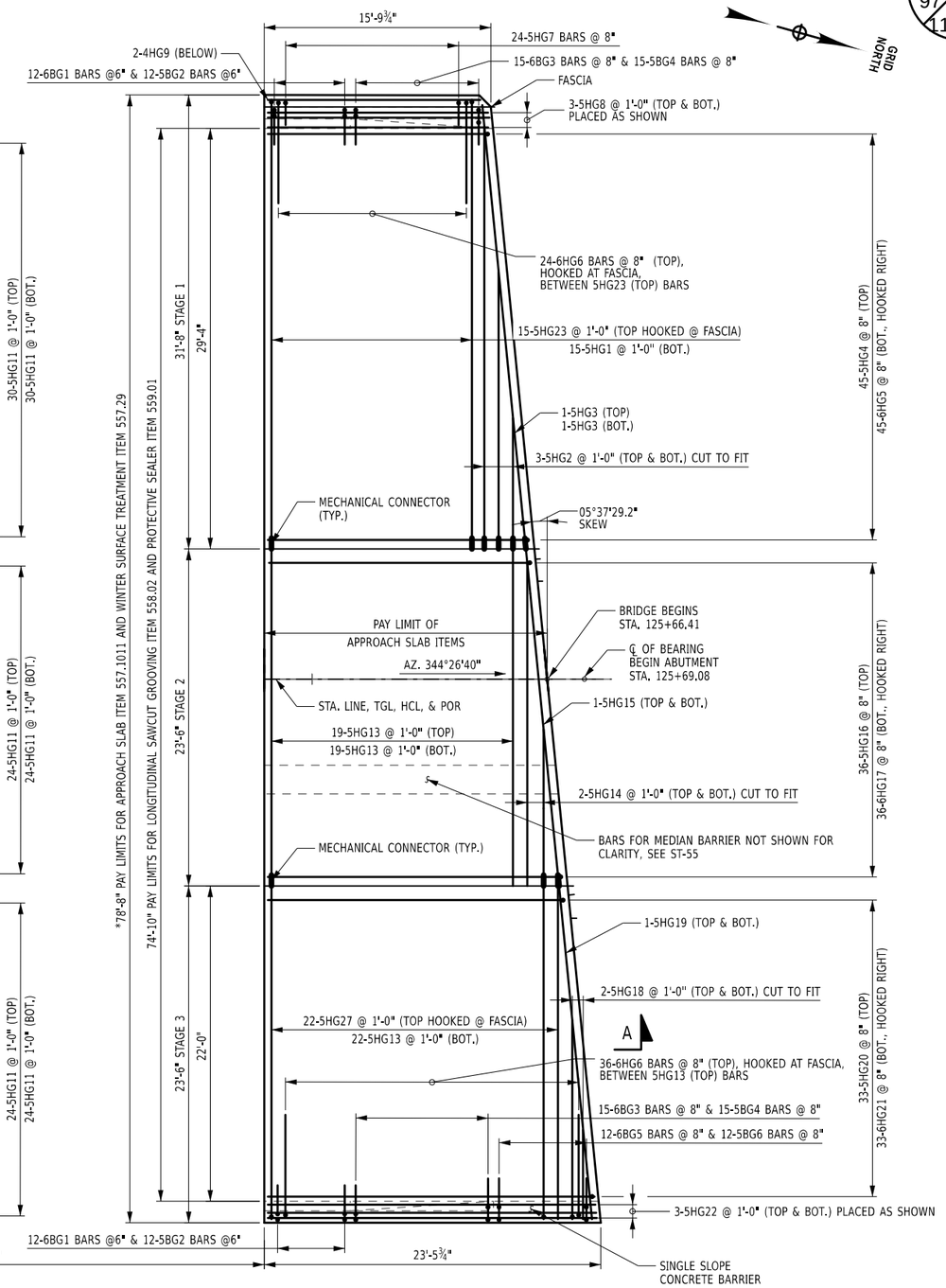

BEGIN APPROACH SLAB REINFORCEMENT PLAN
NOT TO SCALE

ALTERED ON:	AFFIXED ON: 08/10/2026
SIGNATURE: STAMP:	SIGNATURE: STAMP: STATE OF NEW YORK · EDWIN TWISS · EXCELSIOR · 080650 · LICENSED PROFESSIONAL ENGINEER

IT IS A VIOLATION OF LAW FOR ANY PERSON, UNLESS THEY ARE ACTING UNDER THE DIRECTION OF A LICENSED PROFESSIONAL ENGINEER, ARCHITECT, LANDSCAPE ARCHITECT, OR LAND SURVEYOR, TO ALTER AN ITEM IN ANY WAY. IF AN ITEM BEARING THE STAMP OF A LICENSED PROFESSIONAL IS ALTERED, THE ALTERING ENGINEER, ARCHITECT, LANDSCAPE ARCHITECT, OR LAND SURVEYOR SHALL STAMP THE DOCUMENT AND INCLUDE THE NOTATION "ALTERED BY" FOLLOWED BY THEIR SIGNATURE, THE DATE OF SUCH ALTERATION, AND A SPECIFIC DESCRIPTION OF THE ALTERATION.

REVISIONS

DATE	DESCRIPTION	BY	SYM.

NEW YORK STATE | Thruway Authority

AECOM

TITLE OF PROJECT: SUPERSTRUCTURE REPLACEMENT GSP CONNECTOR OVER NYS THRUWAY
LOCATION OF PROJECT: BIN 5514049 (MP 23.53)
TITLE OF DRAWING: APPROACH SLAB DETAILS (1 OF 2)

CONTRACT NUMBER: TANY 26-23B
DATE: JULY 2026
DRAWING NUMBER: ST-47

DESIGN SUPERVISOR: RWL | DESIGNED BY: IW / MR / VZ | DRAFTED BY: AICE | CHECKED BY: IW / MR / VZ | CHECKED BY: AICE

DESIGN SUPERVISOR: RWL | DESIGNED BY: IW / MR / VZ | CHECKED BY: IW / MR / VZ | DRAFTED BY: AICE | CHECKED BY: AICE | AICE

END APPROACH SLAB TABLE

	PLACEMENT	CONCRETE (SY) ITEM 557.1011	WINTER SURFACE TREATMENT (SY) ITEM 557.29	LONGITUDINAL SAWCUT GROOVING (SY) ITEM 558.02	PROTECTIVE SEALER (SF) ITEM 559.01
STAGE I	APPROACH SLAB	52.8	52.8	48.9	453.0
	SLEEPER SLAB	20.6	6.9	6.9	59.0
STAGE II	APPROACH SLAB	39.2	39.2	39.2	353.0
	SLEEPER SLAB	15.7	5.2	5.2	47.0
STAGE III	APPROACH SLAB	39.2	39.2	36.7	330.0
	SLEEPER SLAB	15.7	5.2	5.2	44.0

GENERAL NOTES:

ALL REINFORCEMENT SHALL HAVE 3" COVER UNLESS OTHERWISE NOTED.

(G) DENOTES GALVANIZED REINFORCEMENT

DETAILS ON THE DRAWINGS LABELED AS "NOT TO SCALE" ARE INTENTIONALLY DRAWN NOT TO SCALE FOR VISUAL CLARITY. ALL OTHER DETAILS, FOR WHICH NO SCALE IS SHOWN, ARE DRAWN PROPORTIONAL AND ARE FULLY DIMENSIONED.

FOR SECTION A-A, SEE DRAWING NUMBER ST-49.

*CONTRACTOR SHALL FIELD VERIFY DIMENSION IN FIELD BASED ON THE APPROACH SLAB EXTENDING 6" BEYOND THE EXISTING FACE OF THE EAL WINGWALL.

5 0 5 10 15 20'

1" = 10'

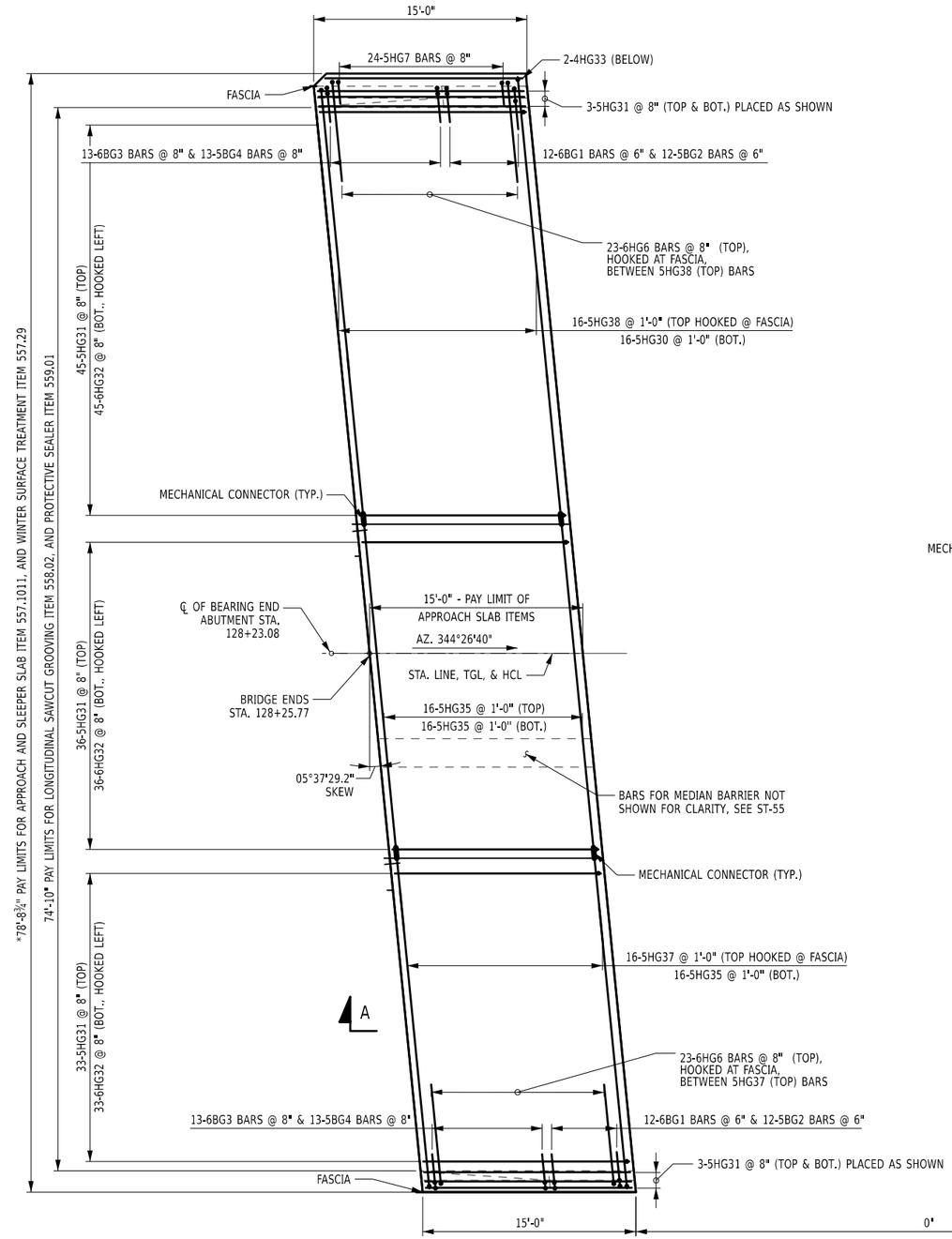

END APPROACH SLAB REINFORCEMENT PLAN
NOT TO SCALE

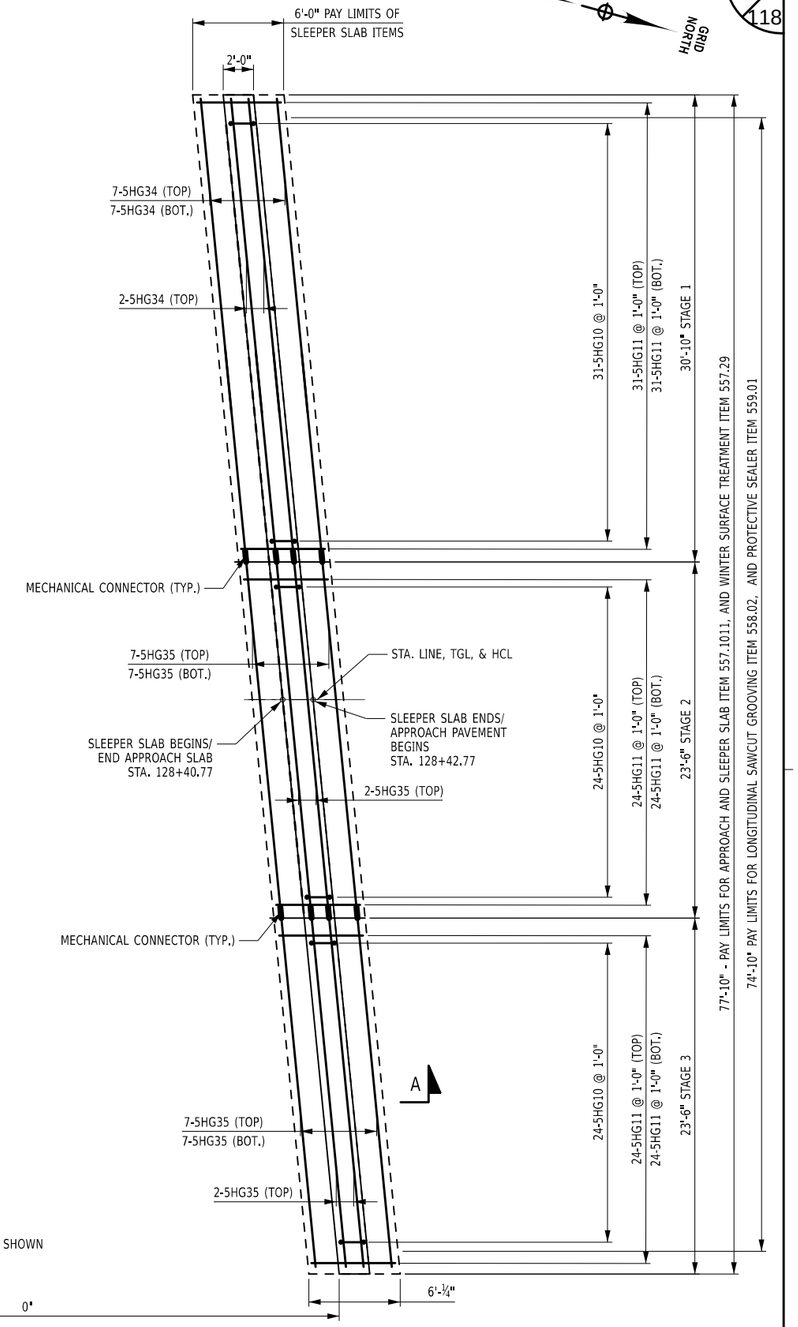

END SLEEPER SLAB REINFORCEMENT PLAN
NOT TO SCALE

ALTERED ON:

AFFIXED ON: 08/10/2026

SIGNATURE:
STAMP:

SIGNATURE:
STAMP:

STATE OF NEW YORK · EDWIN TWISS · EXCELSIOR · 080650 · LICENSED PROFESSIONAL ENGINEER

IT IS A VIOLATION OF LAW FOR ANY PERSON, UNLESS THEY ARE ACTING UNDER THE DIRECTION OF A LICENSED PROFESSIONAL ENGINEER, ARCHITECT, LANDSCAPE ARCHITECT, OR LAND SURVEYOR, TO ALTER AN ITEM IN ANY WAY. IF AN ITEM BEARING THE STAMP OF A LICENSED PROFESSIONAL IS ALTERED, THE ALTERING ENGINEER, ARCHITECT, LANDSCAPE ARCHITECT, OR LAND SURVEYOR SHALL STAMP THE DOCUMENT AND INCLUDE THE NOTATION "ALTERED BY" FOLLOWED BY THEIR SIGNATURE, THE DATE OF SUCH ALTERATION, AND A SPECIFIC DESCRIPTION OF THE ALTERATION.

REVISIONS

DATE	DESCRIPTION	BY	SYM.

NEW YORK STATE | Thruway Authority

AECOM

TITLE OF PROJECT
SUPERSTRUCTURE REPLACEMENT
GSP CONNECTOR OVER NYS THRUWAY

LOCATION OF PROJECT
BIN 5514049 (MP 23.53)

TITLE OF DRAWING
APPROACH SLAB DETAILS
(2 OF 2)

CONTRACT NUMBER: TANY 26-23B

DATE: JULY 2026

DRAWING NUMBER: ST-48

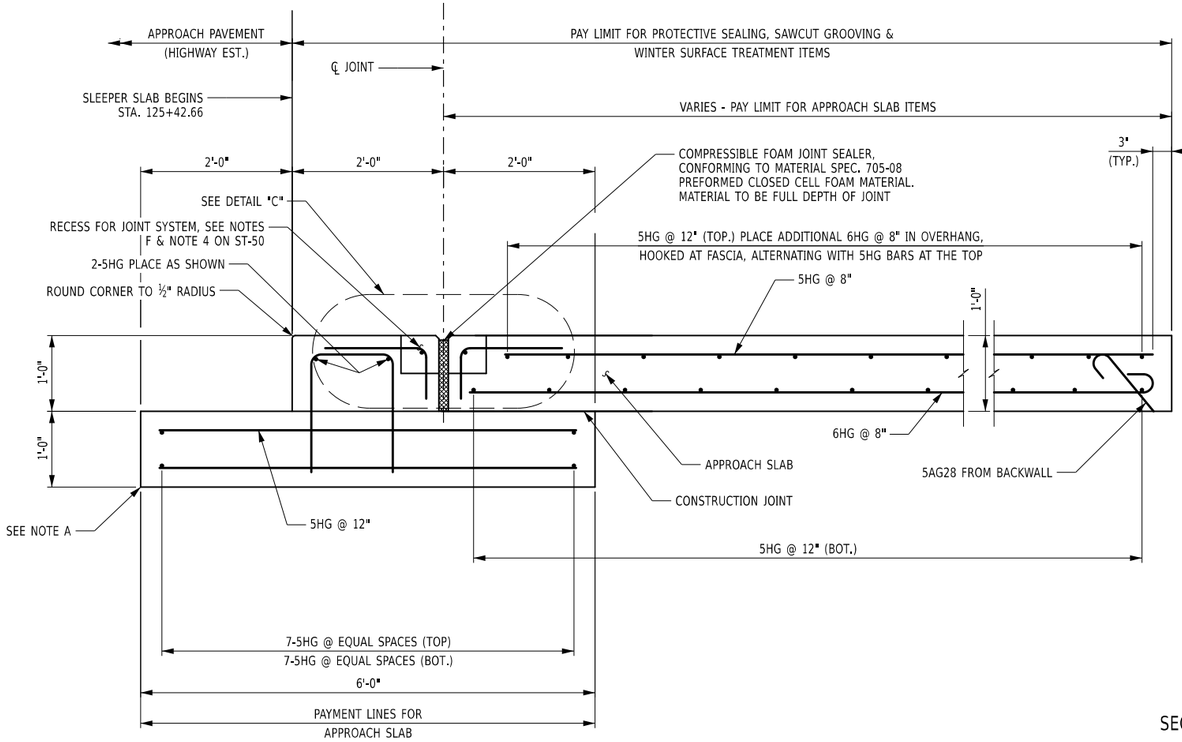

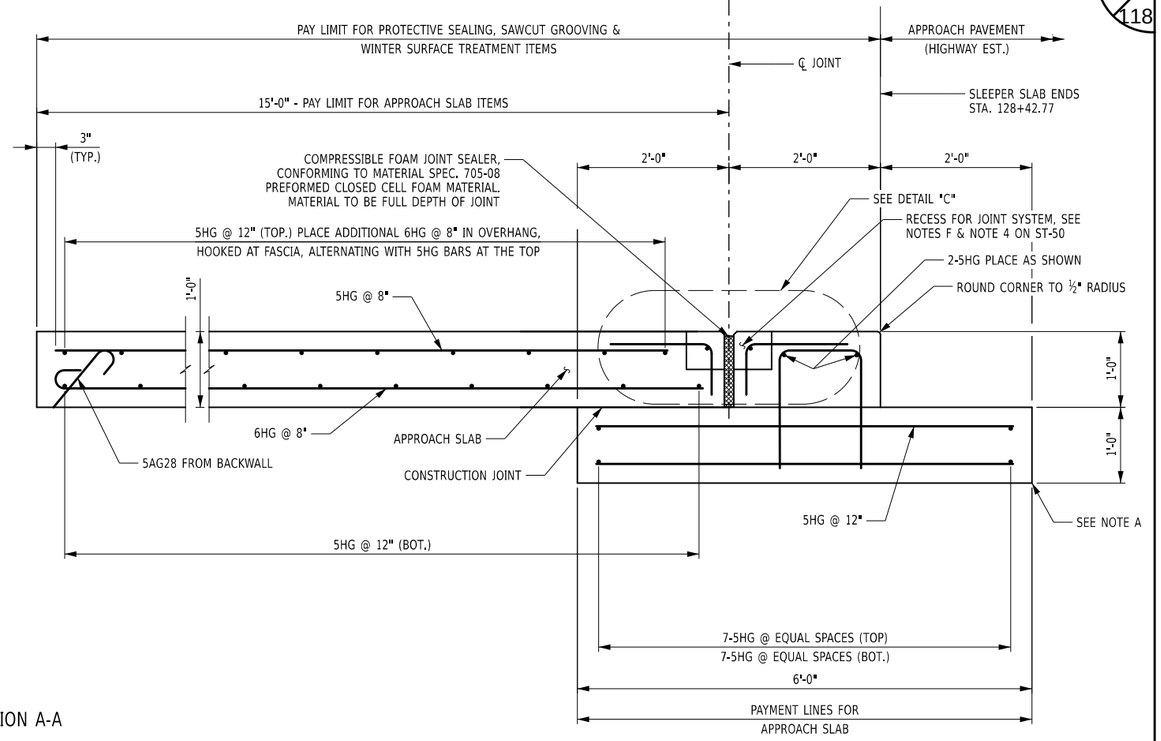

SECTION A-A

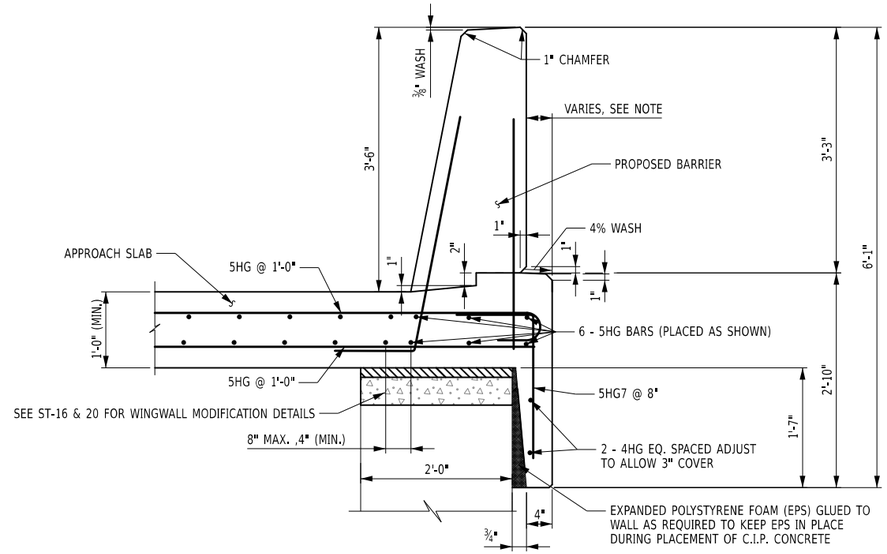

TYPICAL APPROACH SLAB SECTION OVER U-WALL

GENERAL NOTES:

ALL REINFORCEMENT SHALL HAVE 3" COVER UNLESS OTHERWISE NOTED.

(G) DENOTES GALVANIZED REINFORCEMENT

DETAILS ON THE DRAWINGS LABELED AS "NOT TO SCALE" ARE INTENTIONALLY DRAWN NOT TO SCALE FOR VISUAL CLARITY. ALL OTHER DETAILS, FOR WHICH NO SCALE IS SHOWN, ARE DRAWN PROPORTIONAL AND ARE FULLY DIMENSIONED.

FOR SECTION A-A, SEE DRAWING NUMBER ST-47 & ST-48
FOR DETAIL C, SEE ST-50

5 0 5 10 15 20'
1" = 10'

NOTES:

A. EXCAVATION FOR SLEEPER SLABS SHALL BE CAREFULLY MADE AFTER COMPACTED ABUTMENT EMBANKMENT IS IN PLACE. THE SLEEPER SLABS SHALL BE FOUNDED ON UNDISTURBED COMPACT MATERIAL OR RE-COMPACTED MATERIAL. NO LOOSE BACKFILL SHALL BE ALLOWED. THE CONTRACTOR SHALL TAKE ALL NECESSARY PRECAUTIONS TO PROTECT THE SLEEPER SLAB FROM TEMPORARY LOADINGS OR ANY CONDITION WHICH COULD CAUSE MOVEMENTS OR UNEVEN SETTLEMENT OF THE SLEEPER SLAB.

B. TO PERMIT UNHINDERED LONGITUDINAL MOVEMENT OF SLAB, THE SURFACE OF THE SUBBASE COURSE MUST BE ACCURATELY CONTROLLED TO FOLLOW AND BE PARALLEL TO THE ROADWAY GRADE AND CROSS SLOPE. POLYETHYLENE CURING COVERS (WHITE OPAQUE) IN ACCORDANCE WITH MATERIAL SPECIFICATION SUBSECTION 711-04 SHALL BE PLACED ON THE FINISHED SUBBASE COURSE THE FULL WIDTH OF THE APPROACH SLAB PRIOR TO PLACEMENT OF THE REINFORCEMENT. THE CURING COVERS SHALL BE .004 in. THICK, AND LAPS SHALL BE 2 ft. MINIMUM.

C. TOP OF SLEEPER SLABS SHALL BE STEEL TROWEL FINISHED AND FOLLOW THE CROSS SLOPE AND GRADE OF ROADWAY. COMPRESSED SYNTHETIC SHEET GASKET (TREATED BOTH SIDES), MATERIAL SPECIFICATION 728-06, TWO 1/16" THICK SHEETS SHALL BE PLACED ON THE TOP SURFACE OF THE SLEEPER SLAB. COST TO BE INCLUDED IN THE UNIT PRICE BID FOR THE APPROACH SLAB ITEM.

D. FILL THE RECESS WITH A STRUCTURAL JOINT MATERIAL, LIQUID SEALANT, FROM THE DEPARTMENT'S APPROVED LIST. THE MANUFACTURER'S RECOMMENDATIONS SHALL BE FOLLOWED FOR THOSE SEALANTS THAT REQUIRES A PRIMER. THE CONCRETE SHALL CURE FOR MINIMUM OF 7 DAYS BEFORE JOINT IS SEALED. SEALING SHALL ONLY BE PERFORMED WHEN THE CONCRETE TEMPERATURE IS 40°F OR ABOVE. BOTH JOINT FACES SHALL BE SAND BLASTED TO ROUGHEN THE SURFACE AND TO REMOVE ALL SURFACE MOISTURE AND ANY OTHER MATERIAL THAT MAY INTERFERE WITH BOND.

E. TOP SURFACES OF STRUCTURAL SLABS, APPROACH SLABS AND EXPOSED TOP SURFACES OF SLEEPER SLABS SHALL BE GROOVED UNDER THE SAWCUT GROOVING OF STRUCTURAL SLAB SURFACE ITEM.

F. IF AN ARMORLESS JOINT IS USED, PAYMENT FOR THE ELASTOMERIC CONCRETE HEADERS SHALL BE INCLUDED IN THE ITEM FOR THE JOINT SYSTEM. THE JOINT SYSTEM SHALL BE PAID FOR UNDER ITS APPROPRIATE ITEM.

ALTERED ON:	AFFIXED ON: 08/10/2026
SIGNATURE: STAMP:	SIGNATURE: STAMP: STATE OF NEW YORK · EDWIN TWISS · EXCELSIOR · 080650 · LICENSED PROFESSIONAL ENGINEER

IT IS A VIOLATION OF LAW FOR ANY PERSON, UNLESS THEY ARE ACTING UNDER THE DIRECTION OF A LICENSED PROFESSIONAL ENGINEER, ARCHITECT, LANDSCAPE ARCHITECT, OR LAND SURVEYOR, TO ALTER AN ITEM IN ANY WAY. IF AN ITEM BEARING THE STAMP OF A LICENSED PROFESSIONAL IS ALTERED, THE ALTERING ENGINEER, ARCHITECT, LANDSCAPE ARCHITECT, OR LAND SURVEYOR SHALL STAMP THE DOCUMENT AND INCLUDE THE NOTATION "ALTERED BY" FOLLOWED BY THEIR SIGNATURE, THE DATE OF SUCH ALTERATION, AND A SPECIFIC DESCRIPTION OF THE ALTERATION.

REVISIONS

DATE	DESCRIPTION	BY	SYM.

NEW YORK STATE | Thruway Authority

AECOM

TITLE OF PROJECT
SUPERSTRUCTURE REPLACEMENT
GSP CONNECTOR OVER NYS THRUWAY

LOCATION OF PROJECT
BIN 5514049 (MP 23.53)

TITLE OF DRAWING
SLEEPER SLAB DETAILS

CONTRACT NUMBER: TANY 26-23B

DATE: JULY 2026

DRAWING NUMBER: ST-49

DESIGN SUPERVISOR: RWL | DRAFTED BY: AJCE | DESIGNED BY: IW / MR / VZ | CHECKED BY: AJCE | CHECKED BY: IW / MR / VZ | CHECKED BY: AJCE

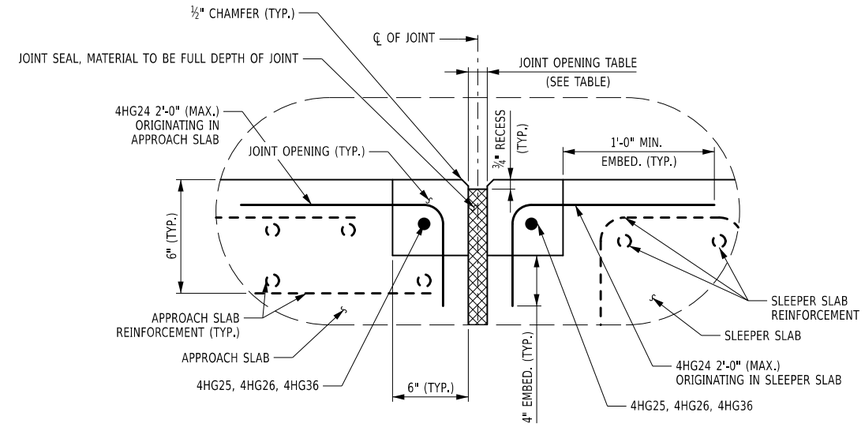

DETAIL "C"

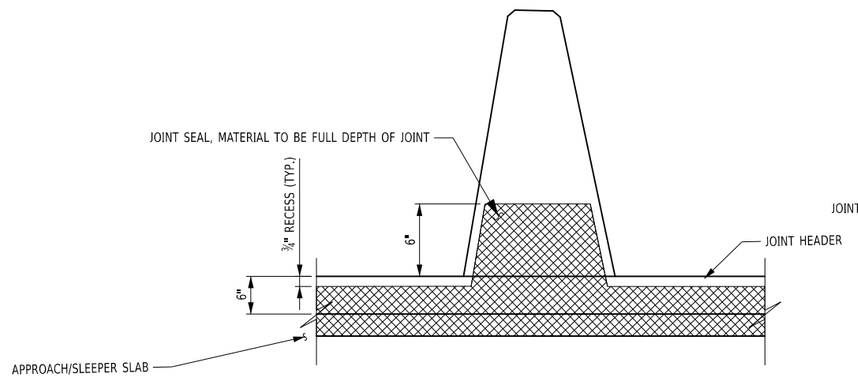

ARMORLESS JOINT PARTIAL PLAN AT MEDIAN BARRIER

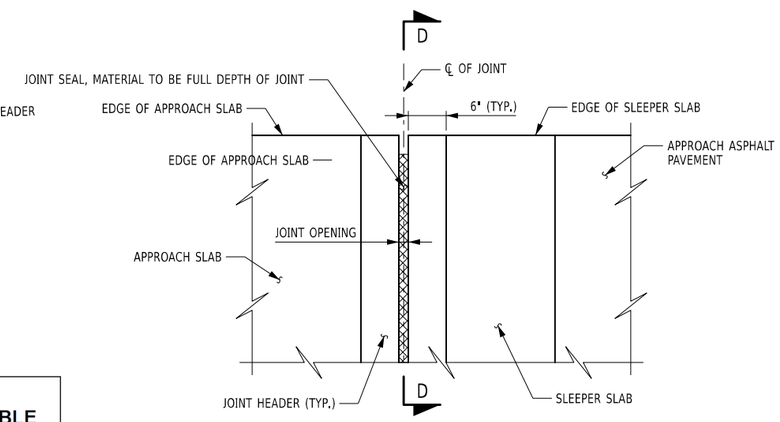

ARMORLESS JOINT PARTIAL PLAN AT BEGIN APPROACH SLAB
(END APPROACH SLAB SIMILAR)

NOTES:

1. THE "JOINT OPENING" SHALL BE DETERMINED AT THE TIME OF PLACEMENT, USING THE TABLE PROVIDED ON THIS DRAWING.
2. THE CONTRACTOR SHALL SUPPLY A JOINT SEAL WITH AN UNCOMPRESSED WIDTH EQUAL TO OR GREATER THAN THE DIMENSION NOTED AS "MIN. SEAL WIDTH" IN THE TABLE. THE SEAL SUPPLIED SHALL NOT EXCEED THE MANUFACTURER'S COMPRESSION LIMITS AT THE "MINIMUM OPENING" NOTED IN THE TABLE.
3. THE SUPERSTRUCTURE TEMPERATURE USED TO DETERMINE THE JOINT OPENING SHALL BE THE AVERAGE TEMPERATURE OF THE BOTTOM OF THE GIRDER TOP FLANGES. A MINIMUM OF TWO TEMPERATURE READINGS PER SPAN SHALL BE USED TO CALCULATE THE AVERAGE SUPERSTRUCTURE TEMPERATURE.
4. ALL HEADER REINFORCEMENT SHALL HAVE A 2" MINIMUM COVER.
5. ALL APPROACH SLAB AND SLEEPER SLAB REINFORCEMENT SHALL HAVE A 3" MINIMUM COVER.
6. SEE DWG. NO. ST-49 FOR NOTES A THROUGH F.
7. FOR LOCATION OF DETAIL "C", SEE ST-49.
8. ARMORLESS JOINT BETWEEN SLEEPER SLAB AND APPROACH SLAB SHALL BE PAID FOR UNDER ITEM 567.60.

(G) DENOTES GALVANIZED REINFORCEMENT

BEGIN APPROACH EXPANSION JOINT OPENING TABLE

SUPERSTRUCTURE TEMPERATURE (°F)	JOINT OPENING (in.)
30	2 1/4
35	2 1/8
40	2
45	2
50	1 7/8
55	1 7/8
60	1 3/4
65	1 3/4
70	1 5/8
75	1 5/8
80	1 1/2
85	1 3/8
90	1 3/8
95	1 1/4
100	1 1/4
105	1 1/8
110	1 1/8

NOTES:
MIN. OPENING (in.) = 1.125
MAX. OPENING / REQ. MIN. SEAL WIDTH (in.) = 2.875
TOTAL MOVEMENT (IN) = 1.75

END APPROACH EXPANSION JOINT OPENING TABLE

SUPERSTRUCTURE TEMPERATURE (°F)	JOINT OPENING (in.)
30	2 1/8
35	2
40	2
45	1 7/8
50	1 7/8
55	1 3/4
60	1 5/8
65	1 5/8
70	1 1/2
75	1 1/2
80	1 3/8
85	1 3/8
90	1 1/4
95	1 1/4
100	1 1/8
105	1 1/8
110	1

NOTES:
MIN. OPENING (in.) = 1.0
MAX. OPENING / REQ. MIN. SEAL WIDTH (in.) = 2.75
TOTAL MOVEMENT (IN) = 1.75

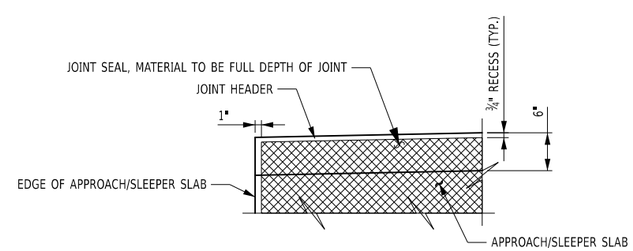

SECTION D-D

ALTERED ON:

AFFIXED ON: 08/10/2026

SIGNATURE:
STAMP:

SIGNATURE:
STAMP:

STATE OF NEW YORK
EDWIN TWISS
080650
LICENSED PROFESSIONAL ENGINEER

IT IS A VIOLATION OF LAW FOR ANY PERSON, UNLESS THEY ARE ACTING UNDER THE DIRECTION OF A LICENSED PROFESSIONAL ENGINEER, ARCHITECT, LANDSCAPE ARCHITECT, OR LAND SURVEYOR, TO ALTER AN ITEM IN ANY WAY. IF AN ITEM BEARING THE STAMP OF A LICENSED PROFESSIONAL IS ALTERED, THE ALTERING ENGINEER, ARCHITECT, LANDSCAPE ARCHITECT, OR LAND SURVEYOR SHALL STAMP THE DOCUMENT AND INCLUDE THE NOTATION "ALTERED BY" FOLLOWED BY THEIR SIGNATURE, THE DATE OF SUCH ALTERATION, AND A SPECIFIC DESCRIPTION OF THE ALTERATION.

REVISIONS

DATE	DESCRIPTION	BY	SYM.

NEW YORK STATE | Thruway Authority

AECOM

TITLE OF PROJECT
SUPERSTRUCTURE REPLACEMENT
GSP CONNECTOR OVER NYS THRUWAY

LOCATION OF PROJECT
BIN 5514049 (MP 23.53)

TITLE OF DRAWING
ARMORLESS JOINT DETAILS

CONTRACT NUMBER: TANY 26-23B

DATE: JULY 2026

DRAWING NUMBER: ST-50

DESIGN SUPERVISOR: RWL | DESIGNED BY: IW / MR / VZ | DRAFTED BY: AICE | CHECKED BY: IW / MR / VZ | CHECKED BY: AICE

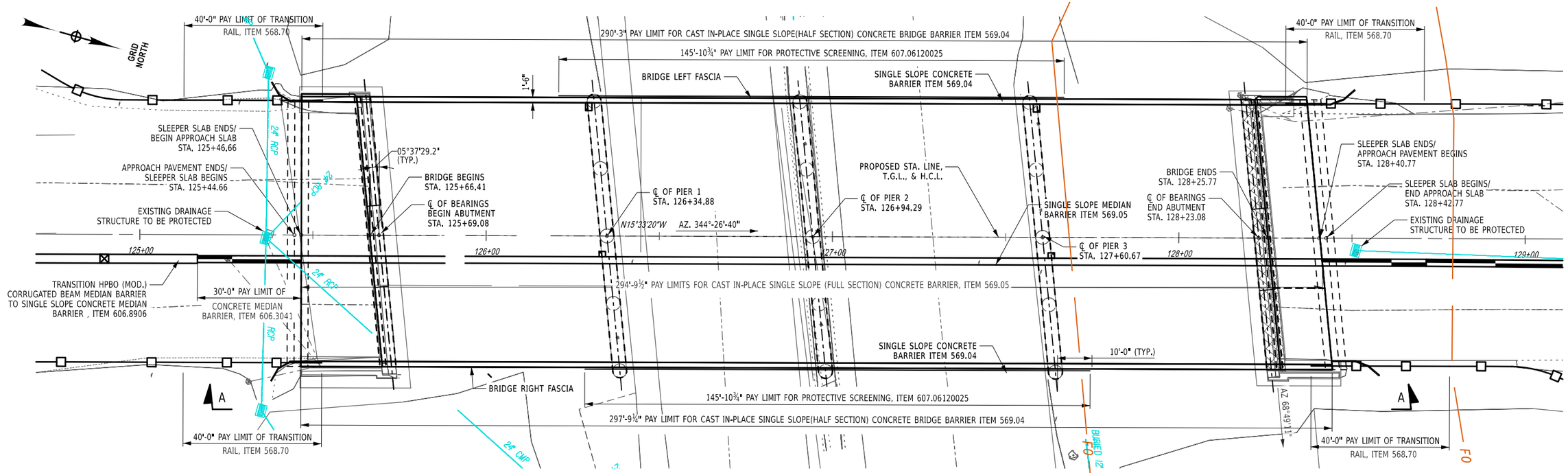

CONCRETE BARRIER, TRANSITION RAILING, AND DRAINAGE LAYOUT PLAN
NOT TO SCALE

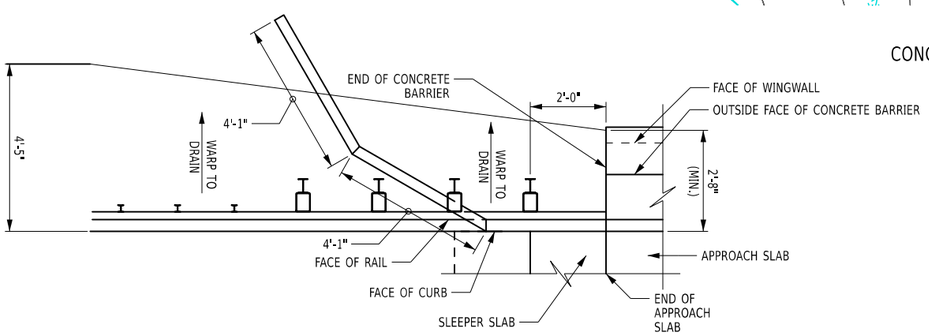

DRAINAGE FOR CONCRETE BARRIER ON BEGIN APPROACH SLAB
NOT TO SCALE

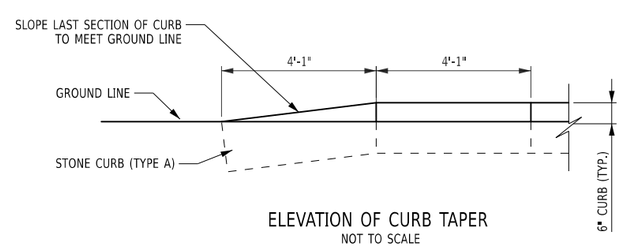

ELEVATION OF CURB TAPER
NOT TO SCALE

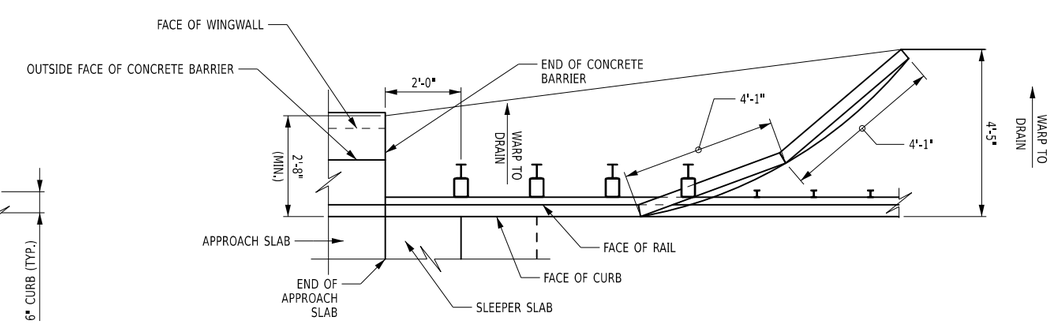

DRAINAGE FOR CONCRETE BARRIER ON END APPROACH SLAB
NOT TO SCALE

AICE
CHECKED BY:
IW / MR / VZ
DRAFTED BY:
AICE
CHECKED BY:
IW / MR / VZ
DESIGNED BY:
RWL
DESIGN SUPERVISOR:

ALTERED ON:	AFFIXED ON: 08/10/2026
SIGNATURE: STAMP:	SIGNATURE: STAMP: STATE OF NEW YORK · EDWIN TWISS · EXCELSIOR · 080650 · LICENSED PROFESSIONAL ENGINEER

IT IS A VIOLATION OF LAW FOR ANY PERSON, UNLESS THEY ARE ACTING UNDER THE DIRECTION OF A LICENSED PROFESSIONAL ENGINEER, ARCHITECT, LANDSCAPE ARCHITECT, OR LAND SURVEYOR, TO ALTER AN ITEM IN ANY WAY. IF AN ITEM BEARING THE STAMP OF A LICENSED PROFESSIONAL IS ALTERED, THE ALTERING ENGINEER, ARCHITECT, LANDSCAPE ARCHITECT, OR LAND SURVEYOR SHALL STAMP THE DOCUMENT AND INCLUDE THE NOTATION "ALTERED BY" FOLLOWED BY THEIR SIGNATURE, THE DATE OF SUCH ALTERATION, AND A SPECIFIC DESCRIPTION OF THE ALTERATION.

REVISIONS

DATE	DESCRIPTION	BY	SYM.

NEW YORK STATE | Thruway Authority

AECOM

TITLE OF PROJECT
SUPERSTRUCTURE REPLACEMENT
GSP CONNECTOR OVER NYS THRUWAY

LOCATION OF PROJECT
BIN 5514049 (MP 23.53)

TITLE OF DRAWING
CONCRETE BARRIER TRANSITION RAILING, AND DRAINAGE LAYOUT PLAN

CONTRACT NUMBER: TANY 26-23B

DATE: JULY 2026

DRAWING NUMBER: ST-51

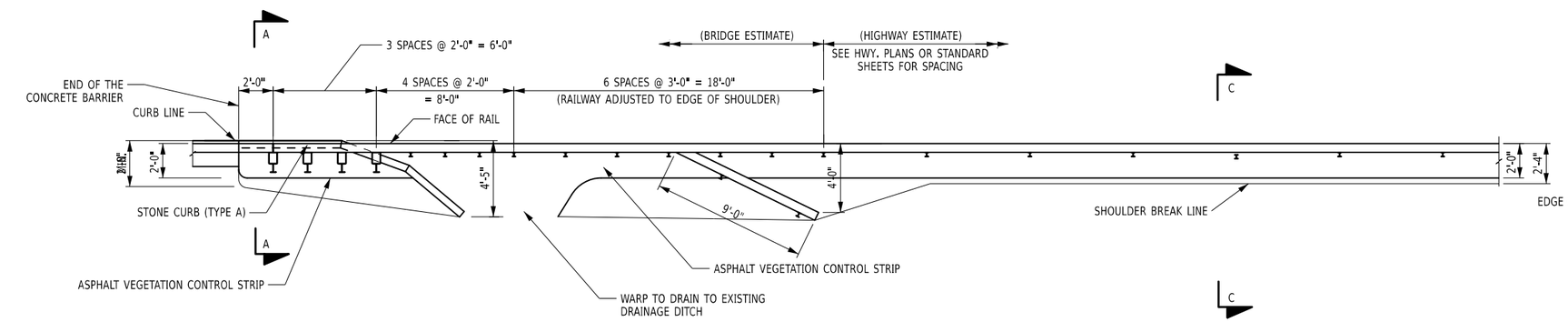

PLAN APPROACH SHOULDER (END APPROACH)

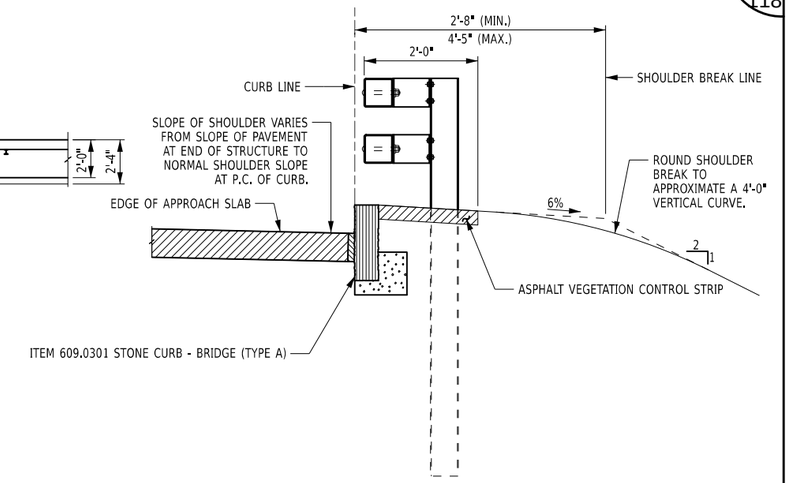

SECTION A-A

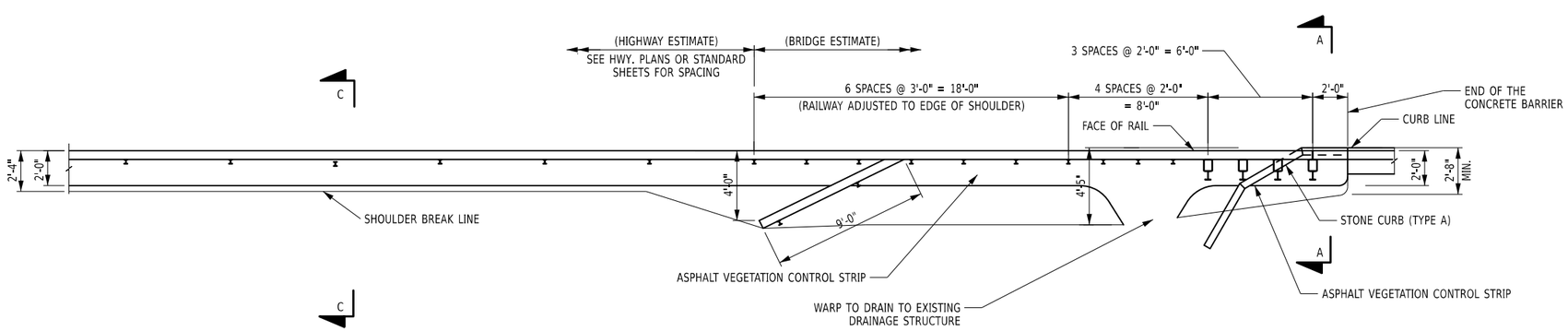

PLAN APPROACH SHOULDER (BEGIN APPROACH)

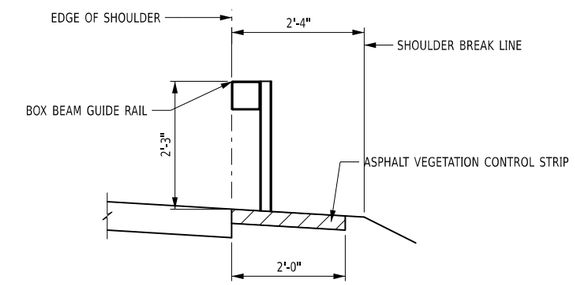

SECTION C-C

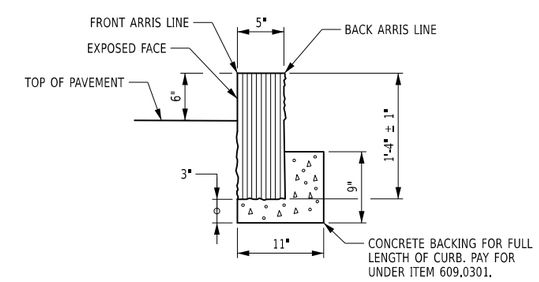

SAWED OR HAMMERED TOP, QUARRY SPLIT FACE

SECTION OF CURB DETAIL - TYPE A

NOTE:

1. FOR DETAILS OF BOX BEAM GUIDE RAIL, SEE DRAWING NO. ST-56.
2. FOR DETAILS OF CURB LAYOUT SEE ST-51.
3. ITEM 609.0301 - ALL MORTAR SHALL CONFORM TO N.Y.S. STANDARD SPECIFICATIONS SUBSECTION 705-21.

ALTERED ON:	AFFIXED ON: 08/10/2026
SIGNATURE: STAMP:	SIGNATURE: STAMP: STATE OF NEW YORK · EDWIN TWISS · 080650 · LICENSED PROFESSIONAL ENGINEER

IT IS A VIOLATION OF LAW FOR ANY PERSON, UNLESS THEY ARE ACTING UNDER THE DIRECTION OF A LICENSED PROFESSIONAL ENGINEER, ARCHITECT, LANDSCAPE ARCHITECT, OR LAND SURVEYOR, TO ALTER AN ITEM IN ANY WAY. IF AN ITEM BEARING THE STAMP OF A LICENSED PROFESSIONAL IS ALTERED, THE ALTERING ENGINEER, ARCHITECT, LANDSCAPE ARCHITECT, OR LAND SURVEYOR SHALL STAMP THE DOCUMENT AND INCLUDE THE NOTATION "ALTERED BY" FOLLOWED BY THEIR SIGNATURE, THE DATE OF SUCH ALTERATION, AND A SPECIFIC DESCRIPTION OF THE ALTERATION.

REVISIONS

DATE	DESCRIPTION	BY	SYM.

NEW YORK STATE | Thruway Authority

AECOM

TITLE OF PROJECT: SUPERSTRUCTURE REPLACEMENT GSP CONNECTOR OVER NYS THRUWAY

LOCATION OF PROJECT: BIN 5514049 (MP 23.53)

TITLE OF DRAWING: APPROACH DRAINAGE DETAILS

CONTRACT NUMBER: TANY 26-23B

DATE: JULY 2026

DRAWING NUMBER: ST-52

AICE | CHECKED BY: | IW / MR / VZ | DRAFTED BY: | AICE | CHECKED BY: | IW / MR / VZ | DESIGNED BY: | RWL | DESIGN SUPERVISOR:

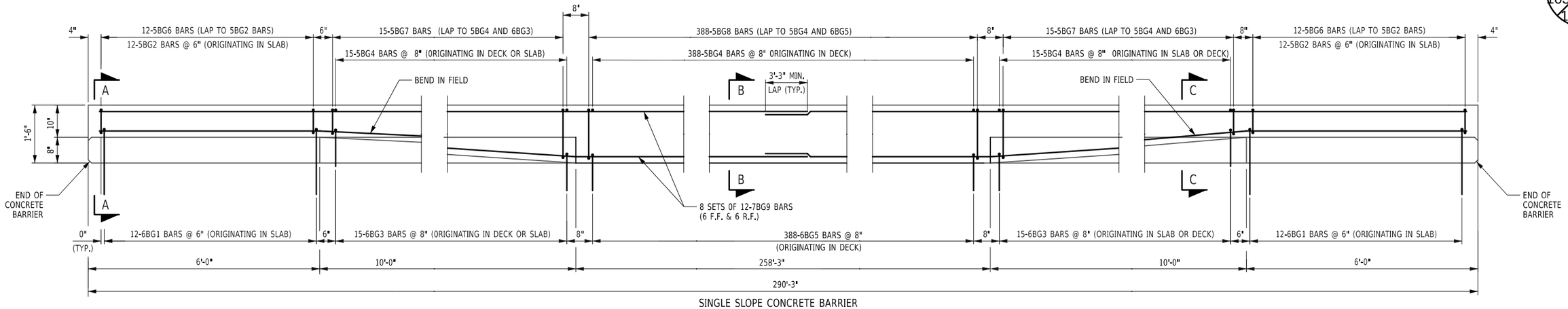

SINGLE SLOPE CONCRETE BARRIER
(WEST FASCIA)

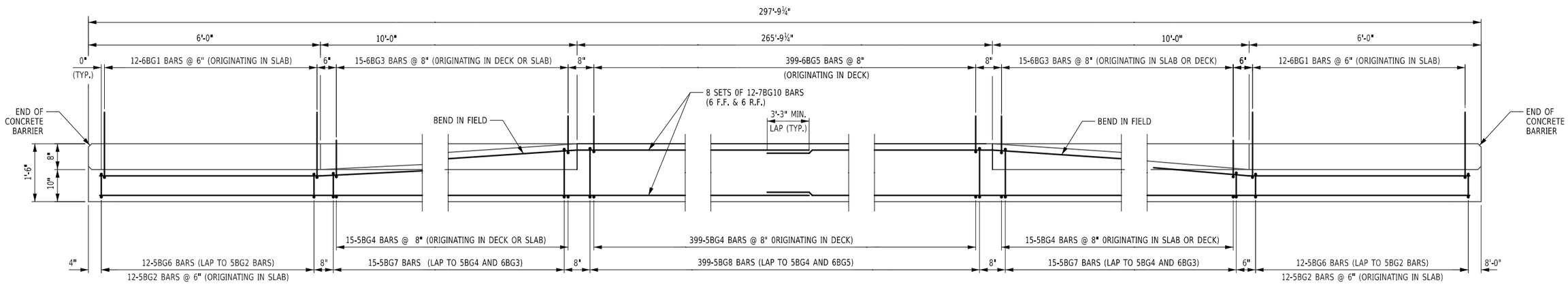

SINGLE SLOPE CONCRETE BARRIER
(EAST FASCIA)

NOTES:

FOR SECTIONS A-A, B-B, AND C-C, SEE DRAWING NO. ST-54.

NOTE A:

CONSTRUCTION GROOVES SHALL BE MADE BY:

1. FORMING FOR CAST-IN-PLACE CONSTRUCTED FORMS.

2. SAWING THE SET CONCRETE WITHIN 8 HOURS OF PLACEMENT FOR CAST-IN-PLACE SLIP FORMED.

3. CUTTING THE PLASTIC CONCRETE.

COMBINATION OF THESE METHODS MAY BE EMPLOYED. THE DEPTH OF THE GROOVES SHALL BE $1\frac{1}{4}$"(-0+$\frac{3}{8}$").FORMED GROOVES SHALL MAKE A 60° ANGLE WITH THE SURFACE. CUT GROOVES SHALL BE FINISHED WITH SHALLOW ($\frac{3}{4}$"±$\frac{1}{4}$") CONSTANT DEPTH 45° CHAMFERS AT THE SURFACE. THE LONGITUDINAL REINFORCING BARS FOR THE CONCRETE BARRIERS SHALL BE CONTINUOUS BETWEEN BRIDGE EXPANSION JOINTS. WHERE SPLICES ARE REQUIRED, THE LENGTH OF THE LAP SHALL BE SUFFICIENT TO DEVELOP EACH BAR.

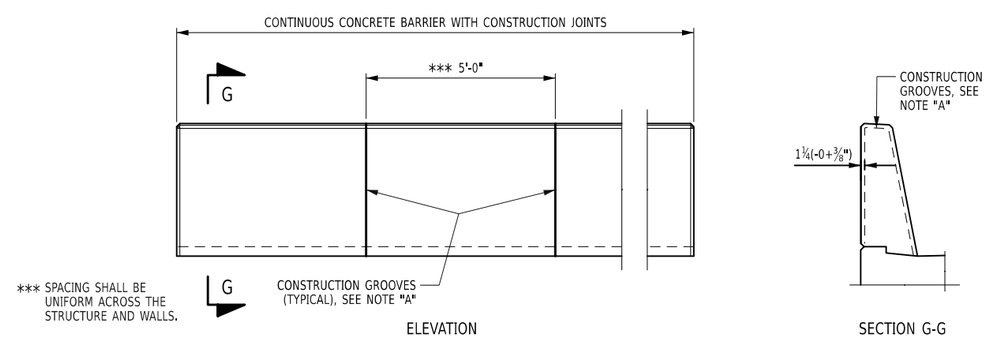

ELEVATION

SECTION G-G

CONCRETE BARRIER GROOVE SPACING

ALTERED ON:	AFFIXED ON: 08/10/2026
SIGNATURE: STAMP:	SIGNATURE: STAMP: STATE OF NEW YORK · EDWIN TWISS · EXCELSIOR · 080650 · LICENSED PROFESSIONAL ENGINEER

IT IS A VIOLATION OF LAW FOR ANY PERSON, UNLESS THEY ARE ACTING UNDER THE DIRECTION OF A LICENSED PROFESSIONAL ENGINEER, ARCHITECT, LANDSCAPE ARCHITECT, OR LAND SURVEYOR, TO ALTER AN ITEM IN ANY WAY. IF AN ITEM BEARING THE STAMP OF A LICENSED PROFESSIONAL IS ALTERED, THE ALTERING ENGINEER, ARCHITECT, LANDSCAPE ARCHITECT, OR LAND SURVEYOR SHALL STAMP THE DOCUMENT AND INCLUDE THE NOTATION "ALTERED BY" FOLLOWED BY THEIR SIGNATURE, THE DATE OF SUCH ALTERATION, AND A SPECIFIC DESCRIPTION OF THE ALTERATION.

REVISIONS

DATE	DESCRIPTION	BY	SYM.

NEW YORK STATE | Thruway Authority

AECOM

TITLE OF PROJECT: SUPERSTRUCTURE REPLACEMENT GSP CONNECTOR OVER NYS THRUWAY

LOCATION OF PROJECT: BIN 5514049 (MP 23.53)

TITLE OF DRAWING: SINGLE SLOPE CONCRETE BARRIER REINFORCEMENT PLAN

CONTRACT NUMBER: TANY 26-23B

DATE: JULY 2026

DRAWING NUMBER: ST-53

DESIGN SUPERVISOR: RWL | DESIGNED BY: IW / MR / VZ | DRAFTED BY: AJCE | CHECKED BY: IW / MR / VZ | CHECKED BY: AJCE

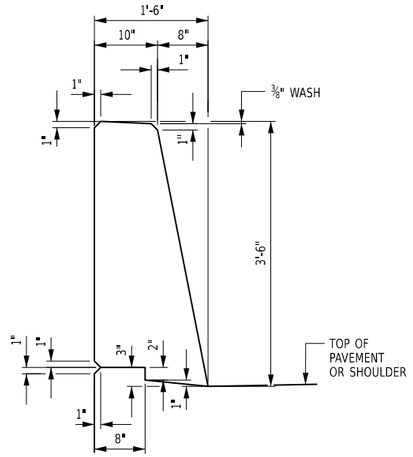

TYPICAL SECTION

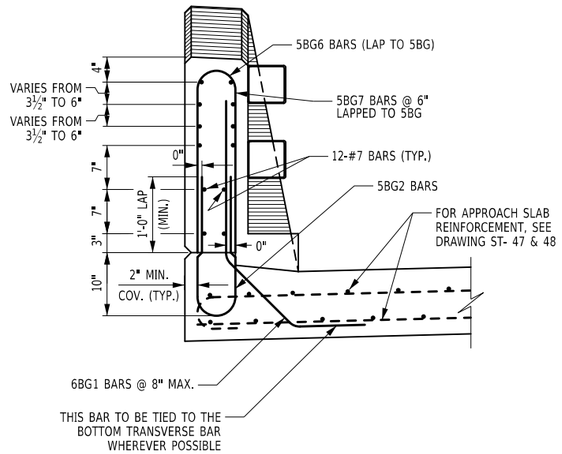

SECTION A-A

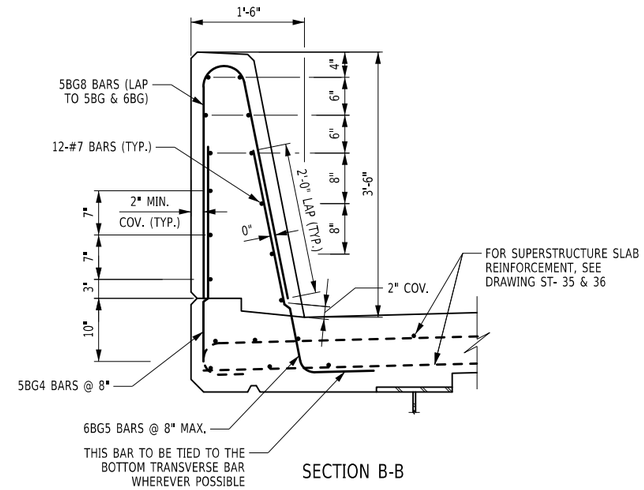

SECTION B-B

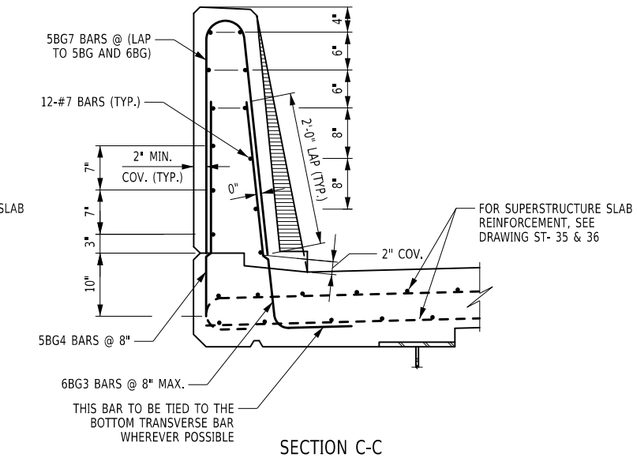

SECTION C-C

SUPERSTRUCTURE SLAB SHOWN, APPROACH SLAB SIMILAR

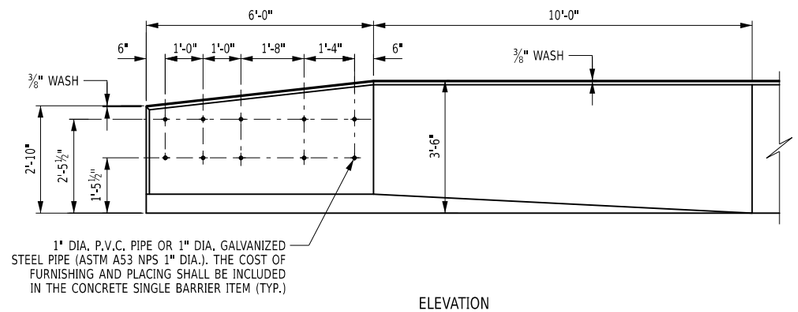

ELEVATION

SINGLE SLOPE (HALF SECTION) CONCRETE BRIDGE BARRIER TRANSITION

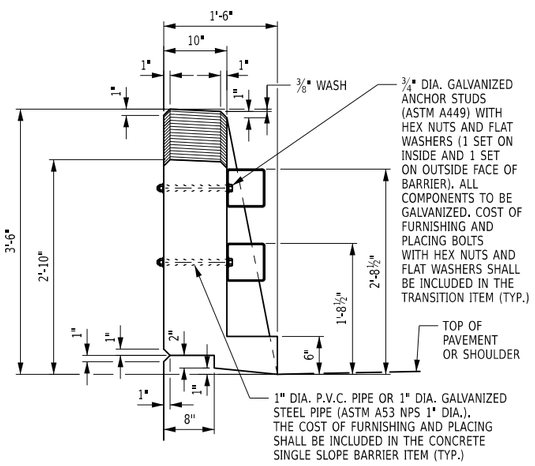

TYPICAL END SECTION

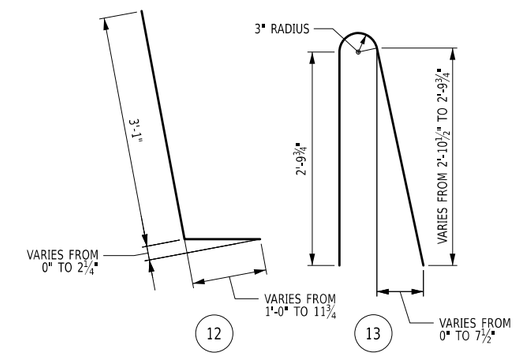

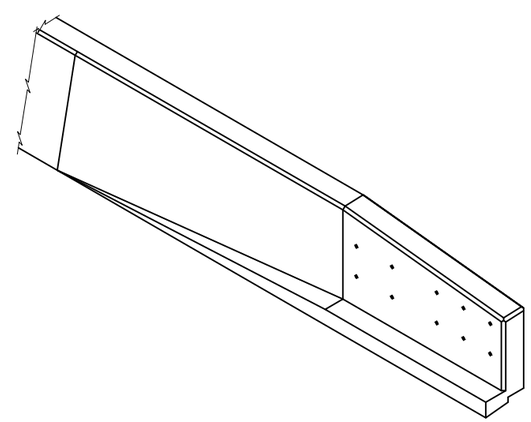

ISOMETRIC OF CONCRETE SINGLE SLOPE (HALF SECTION) CONCRETE BRIDGE BARRIER END SECTION

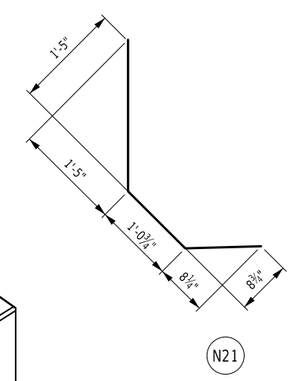

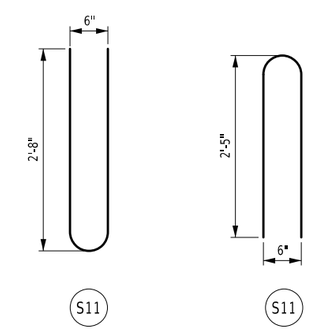

BAR TYPES

NOTES:

1. FOR DECK REINFORCEMENT AND ADDITIONAL OVERHANG REINFORCEMENT DETAILS, SEE DWGS. ST-35, ST-36, & ST-44, ST-45.
2. FOR ADDITIONAL INFORMATION REGARDING THE DOWELS EXTENDING INTO THE CONCRETE BRIDGE BARRIER FROM THE SUPERSTRUCTURE SLAB, SEE BARRIER DETAIL ON DWG. ST-53.
3. FOR SINGLE SLOPE (HALF SECTION) CONCRETE BRIDGE BARRIER REINFORCEMENT BAR LIST, SEE DWG. ST-53.
4. FOR DETAILS OF THE PROTECTIVE SCREENING TO BE MOUNTED TO THE OUTSIDE FENCE OF THE CONCRETE BRIDGE BARRIER, SEE DWG. ST-60.
5. BAR REINFORCEMENT SHALL MEET THE REQUIREMENTS OF ITEM 556.0203. COST OF BARRIER REINFORCEMENT, INCLUDING DOWELS THAT ARE PLACED IN THE SUPERSTRUCTURE SLAB, IS INCLUDED IN THE COST OF ITEM 569.04.
6. FOR LOCATION OF SECTION A-A, B-B, AND C-C, SEE DRAWING ST-53.

ALTERED ON:

AFFIXED ON: 08/10/2026

SIGNATURE:
STAMP:

SIGNATURE:
STAMP:

STATE OF NEW YORK · EDWIN TWISS · EXCELSIOR · 080650 · LICENSED PROFESSIONAL ENGINEER

IT IS A VIOLATION OF LAW FOR ANY PERSON, UNLESS THEY ARE ACTING UNDER THE DIRECTION OF A LICENSED PROFESSIONAL ENGINEER, ARCHITECT, LANDSCAPE ARCHITECT, OR LAND SURVEYOR, TO ALTER AN ITEM IN ANY WAY. IF AN ITEM BEARING THE STAMP OF A LICENSED PROFESSIONAL IS ALTERED, THE ALTERING ENGINEER, ARCHITECT, LANDSCAPE ARCHITECT, OR LAND SURVEYOR SHALL STAMP THE DOCUMENT AND INCLUDE THE NOTATION "ALTERED BY" FOLLOWED BY THEIR SIGNATURE, THE DATE OF SUCH ALTERATION, AND A SPECIFIC DESCRIPTION OF THE ALTERATION.

REVISIONS

DATE	DESCRIPTION	BY	SYM.

NEW YORK STATE | Thruway Authority

AECOM

TITLE OF PROJECT
SUPERSTRUCTURE REPLACEMENT
GSP CONNECTOR OVER NYS THRUWAY

LOCATION OF PROJECT
BIN 5514049 (MP 23.53)

TITLE OF DRAWING
SINGLE SLOPE
CONCRETE BARRIER DETAILS

CONTRACT NUMBER: TANY 26-23B

DATE: JULY 2026

DRAWING NUMBER: ST-54

AICE | CHECKED BY: | IW / MR / VZ | DRAFTED BY: | AICE | CHECKED BY: | IW / MR / VZ | DESIGNED BY: | RWL | DESIGN SUPERVISOR:

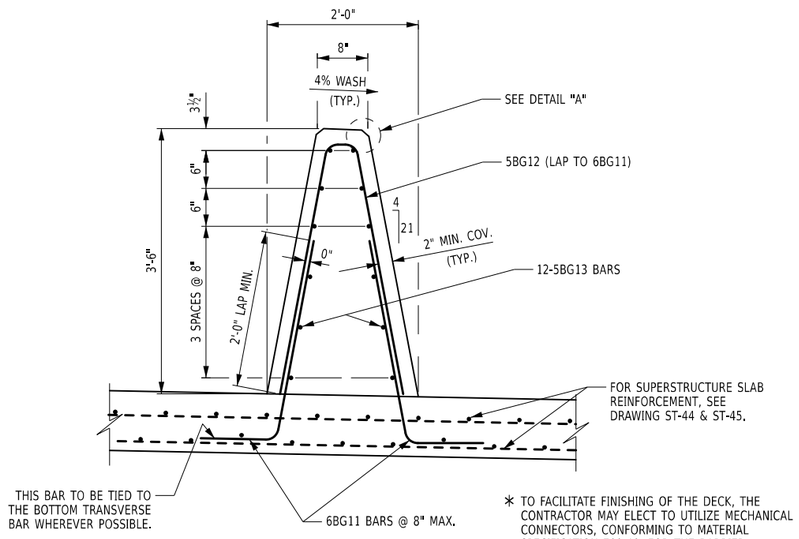

CONCRETE MEDIAN BARRIER

* TO FACILITATE FINISHING OF THE DECK, THE CONTRACTOR MAY ELECT TO UTILIZE MECHANICAL CONNECTORS, CONFORMING TO MATERIAL SPECIFICATION 709-10, FOR THE BARRIER ANCHORAGE REINFORCEMENT.

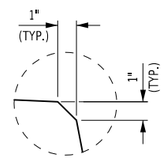

DETAIL "A"

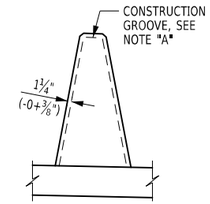

SECTION A-A

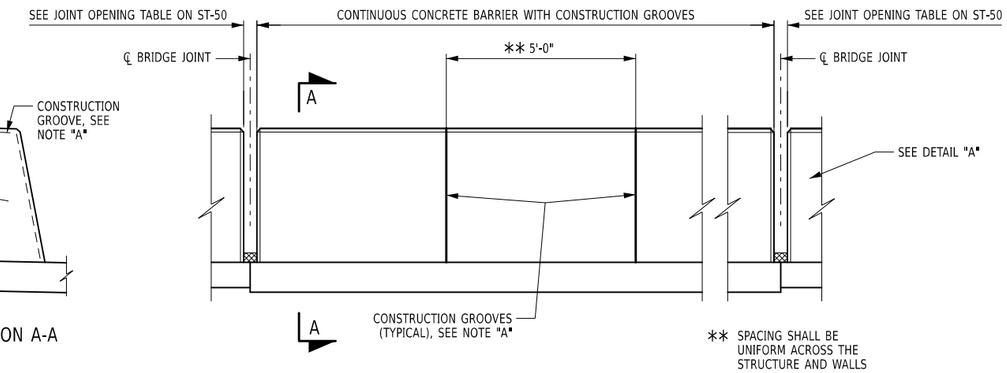

ELEVATION

CONCRETE BARRIER GROOVE SPACING

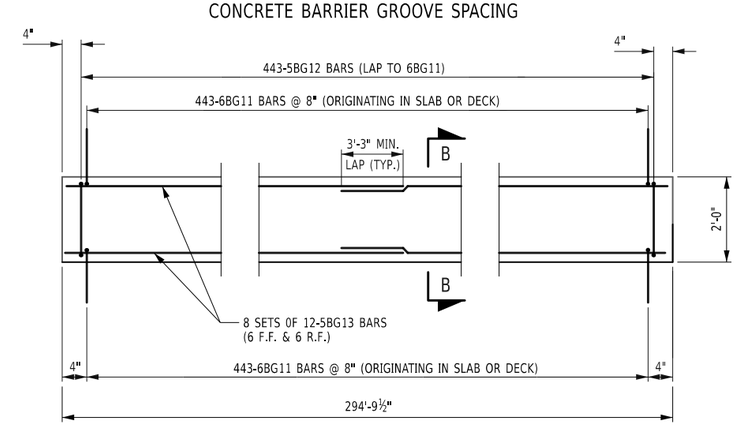

MEDIAN CONCRETE BARRIER
REINFORCEMENT PLAN

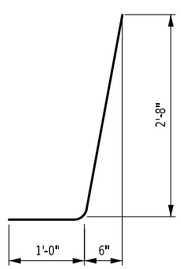

N12

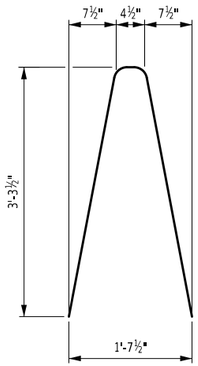

N14

NOTE:

1. FOR DECK REINFORCEMENT AND ADDITIONAL OVERHANG REINFORCEMENT DETAILS, SEE DWGS. ST-35, ST-36, ST-44, & ST-45.

2. BAR REINFORCEMENT SHALL MEET THE REQUIREMENTS OF ITEM 556.0203. COST OF BARRIER REINFORCEMENT, INCLUDING DOWELS THAT ARE PLACED IN THE SUPERSTRUCTURE SLAB, IS INCLUDED IN THE COST OF ITEM 569.04.

NOTE "A":

CONSTRUCTION GROOVES SHALL BE MADE BY:
1. FORMING FOR CAST-IN-PLACE CONSTRUCTED FORMS.
2. SAWING THE SET CONCRETE WITHIN 8 HOURS OF PLACEMENT FOR CAST-IN-PLACE SLIP FORMED.
3. CUTTING THE PLASTIC CONCRETE.

COMBINATION OF THESE METHODS MAY BE EMPLOYED.
THE DEPTH OF THE GROOVES SHALL BE 1¼"(-0+⅜"). FORMED GROOVES SHALL MAKE A 60° ANGLE WITH THE SURFACE. CUT GROOVES SHALL BE FINISHED WITH A SHALLOW (¾"±¼") CONSTANT DEPTH OF 45° CHAMFERS AT THE SURFACE. THE LONGITUDINAL REINFORCING BARS FOR THE CONCRETE BARRIERS SHALL BE CONTINUOUS BETWEEN BRIDGE EXPANSION JOINTS. WHERE SPLICES ARE REQUIRED, THE LENGTH OF THE LAP SHALL BE SUFFICIENT TO DEVELOP EACH BAR.

NOTE:

(G) DENOTES GALVANIZED BARS.

ALTERED ON:	AFFIXED ON: 08/10/2026
SIGNATURE: STAMP:	SIGNATURE: STAMP:

IT IS A VIOLATION OF LAW FOR ANY PERSON, UNLESS THEY ARE ACTING UNDER THE DIRECTION OF A LICENSED PROFESSIONAL ENGINEER, ARCHITECT, LANDSCAPE ARCHITECT, OR LAND SURVEYOR, TO ALTER AN ITEM IN ANY WAY. IF AN ITEM BEARING THE STAMP OF A LICENSED PROFESSIONAL IS ALTERED, THE ALTERING ENGINEER, ARCHITECT, LANDSCAPE ARCHITECT, OR LAND SURVEYOR SHALL STAMP THE DOCUMENT AND INCLUDE THE NOTATION "ALTERED BY" FOLLOWED BY THEIR SIGNATURE, THE DATE OF SUCH ALTERATION, AND A SPECIFIC DESCRIPTION OF THE ALTERATION.

REVISIONS

DATE	DESCRIPTION	BY	SYM.

NEW YORK STATE | Thruway Authority

AECOM

TITLE OF PROJECT
SUPERSTRUCTURE REPLACEMENT
GSP CONNECTOR OVER NYS THRUWAY

LOCATION OF PROJECT
BIN 5514049 (MP 23.53)

TITLE OF DRAWING
SINGLE SLOPE CONCRETE MEDIAN BARRIER DETAILS

CONTRACT NUMBER: TANY 26-23B

DATE: JULY 2026

DRAWING NUMBER: ST-55

AICE | CHECKED BY: | IW / MR / VZ | DRAFTED BY: | AICE | CHECKED BY: | IW / MR / VZ | DESIGNED BY: | RWL | DESIGN SUPERVISOR:

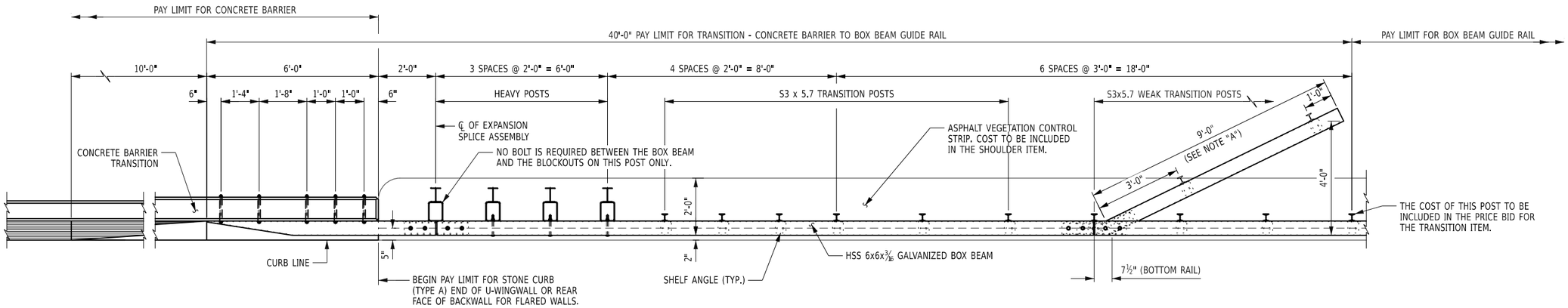

PLAN

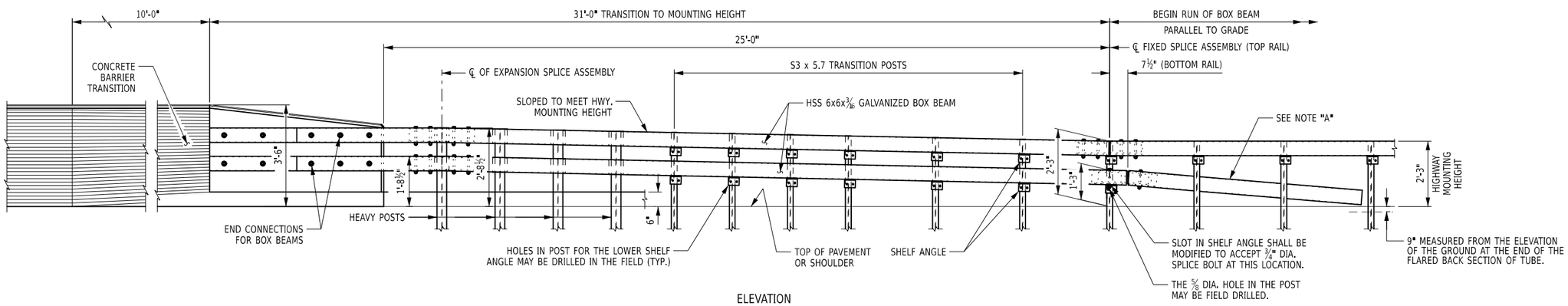

ELEVATION

CONCRETE BARRIER TO BOX BEAM GUIDE RAIL TRANSITION

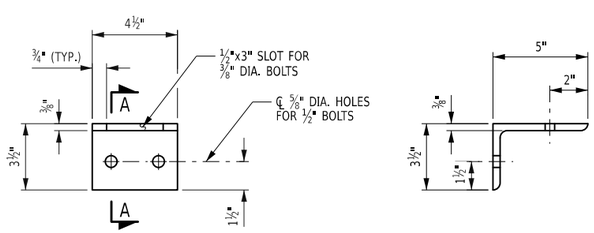

ELEVATION

SECTION A-A

SHELF ANGLE DETAILS

NOTES:

NOTE "A":
THE COST OF THE POSTS, SPLICE TUBE AND RAIL FOR THE TURNBACK IS INCLUDED IN THE PRICE BID FOR THE TRANSITION ITEM.

ANY MODIFICATIONS MADE IN THE FIELD THAT DAMAGES GALVANIZATION SHALL BE REPAIRED IN ACCORDANCE WITH SUBSECTION 719.01 OF THE NYS STANDARD SPECIFICATIONS.

FOR SPLICE ASSEMBLY DETAILS, SEE DRAWING NO. ST-57.

FOR TURNBACK SPLICE DETAILS, SEE DRAWING NO. ST-58.

FOR HEAVY POST, TRANSITION POST, AND WEAK TRANSITION POST DETAILS, SEE DRAWING NO. ST-59.

FOR CURB AND SHOULDER TREATMENT DETAILS, SEE DRAWING NO. ST-52.

FOR END CONNECTIONS FOR BOX BEAM DETAILS, SEE DRAWING NO. ST-58.

ALTERED ON:	AFFIXED ON: 08/10/2026
SIGNATURE: STAMP:	SIGNATURE: STAMP: STATE OF NEW YORK · EDWIN TWISS · EXCELSIOR · 080650 · LICENSED PROFESSIONAL ENGINEER

IT IS A VIOLATION OF LAW FOR ANY PERSON, UNLESS THEY ARE ACTING UNDER THE DIRECTION OF A LICENSED PROFESSIONAL ENGINEER, ARCHITECT, LANDSCAPE ARCHITECT, OR LAND SURVEYOR, TO ALTER AN ITEM IN ANY WAY. IF AN ITEM BEARING THE STAMP OF A LICENSED PROFESSIONAL IS ALTERED, THE ALTERING ENGINEER, ARCHITECT, LANDSCAPE ARCHITECT, OR LAND SURVEYOR SHALL STAMP THE DOCUMENT AND INCLUDE THE NOTATION "ALTERED BY" FOLLOWED BY THEIR SIGNATURE, THE DATE OF SUCH ALTERATION, AND A SPECIFIC DESCRIPTION OF THE ALTERATION.

REVISIONS

DATE	DESCRIPTION	BY	SYM.

NEW YORK STATE | Thruway Authority

AECOM

TITLE OF PROJECT: SUPERSTRUCTURE REPLACEMENT GSP CONNECTOR OVER NYS THRUWAY

LOCATION OF PROJECT: BIN 5514049 (MP 23.53)

TITLE OF DRAWING: BRIDGE TRANSITION RAILING DETAILS (1 OF 4)

CONTRACT NUMBER: TANY 26-23B

DATE: JULY 2026

DRAWING NUMBER: ST-56

AICE | CHECKED BY: | IW / MR / VZ | DRAFTED BY: | AICE | CHECKED BY: | IW / MR / VZ | DESIGNED BY: | RWL | DESIGN SUPERVISOR:

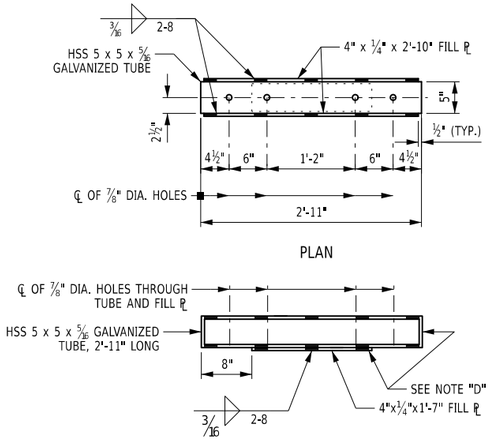

EXPANSION SPLICE TUBE

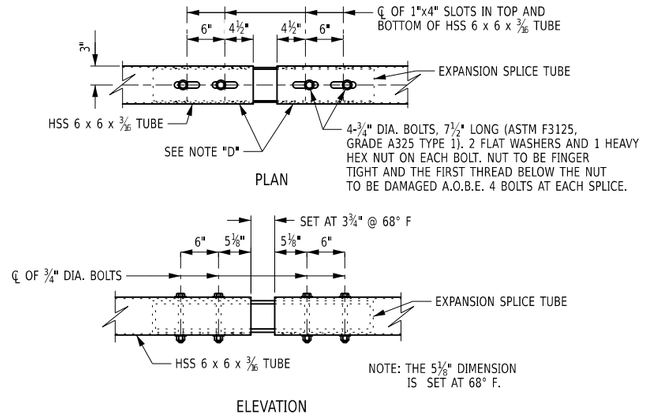

EXPANSION SPLICE ASSEMBLY

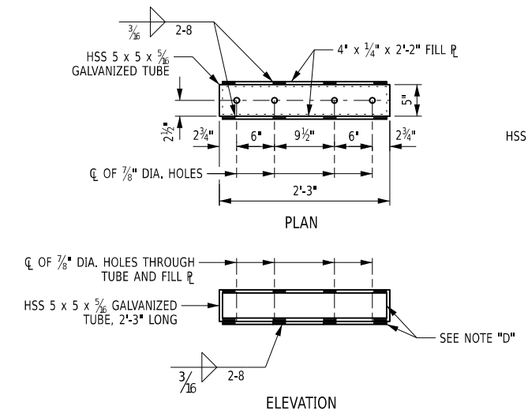

FIXED SPLICE TUBE

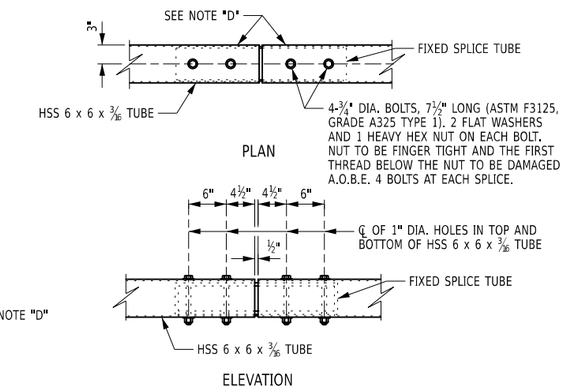

FIXED SPLICE ASSEMBLY

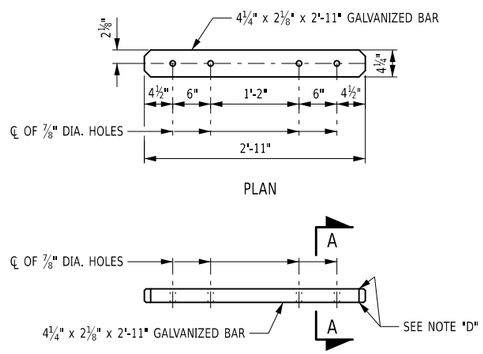

EXPANSION SPLICE BAR

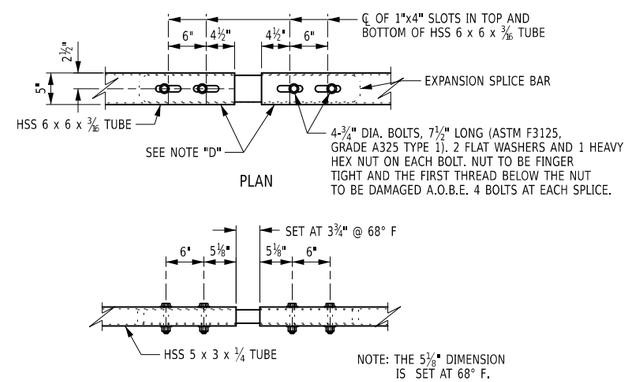

EXPANSION SPLICE ASSEMBLY

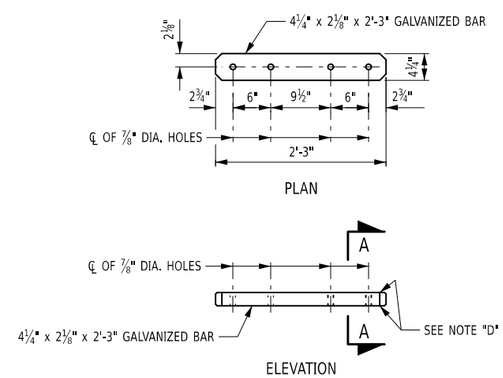

FIXED SPLICE BAR

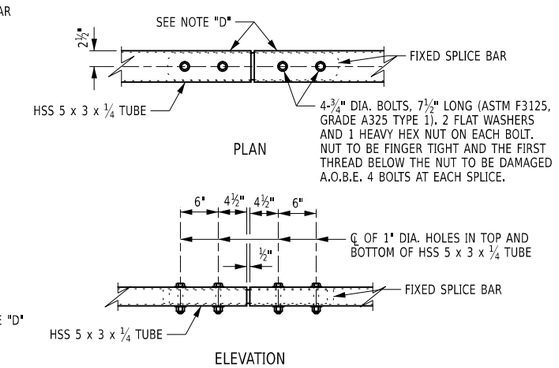

FIXED SPLICE ASSEMBLY

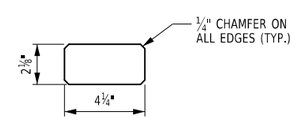

SECTION A-A

NOTE "D":

PROTRUSIONS CAUSED BY WELDING OR GALVANIZING ARE NOT PERMITTED ON THE ADJOINING SURFACES OF THE BOX BEAM RAILS, SPLICE TUBES, AND FILL PLATES.

ALTERED ON:	AFFIXED ON: 08/10/2026
SIGNATURE: STAMP:	SIGNATURE: STAMP: STATE OF NEW YORK · EDWIN TWISS · 080650 · LICENSED PROFESSIONAL ENGINEER

IT IS A VIOLATION OF LAW FOR ANY PERSON, UNLESS THEY ARE ACTING UNDER THE DIRECTION OF A LICENSED PROFESSIONAL ENGINEER, ARCHITECT, LANDSCAPE ARCHITECT, OR LAND SURVEYOR, TO ALTER AN ITEM IN ANY WAY. IF AN ITEM BEARING THE STAMP OF A LICENSED PROFESSIONAL IS ALTERED, THE ALTERING ENGINEER, ARCHITECT, LANDSCAPE ARCHITECT, OR LAND SURVEYOR SHALL STAMP THE DOCUMENT AND INCLUDE THE NOTATION "ALTERED BY" FOLLOWED BY THEIR SIGNATURE, THE DATE OF SUCH ALTERATION, AND A SPECIFIC DESCRIPTION OF THE ALTERATION.

REVISIONS

DATE	DESCRIPTION	BY	SYM.

NEW YORK STATE | Thruway Authority

AECOM

TITLE OF PROJECT: SUPERSTRUCTURE REPLACEMENT GSP CONNECTOR OVER NYS THRUWAY

LOCATION OF PROJECT: BIN 5514049 (MP 23.53)

TITLE OF DRAWING: BRIDGE TRANSITION RAILING DETAILS (2 OF 4)

CONTRACT NUMBER: TANY 26-23B

DATE: JULY 2026

DRAWING NUMBER: ST-57

AICE CHECKED BY: IW / MR / VZ DRAFTED BY: AICE CHECKED BY: IW / MR / VZ DESIGNED BY: RWL DESIGN SUPERVISOR:

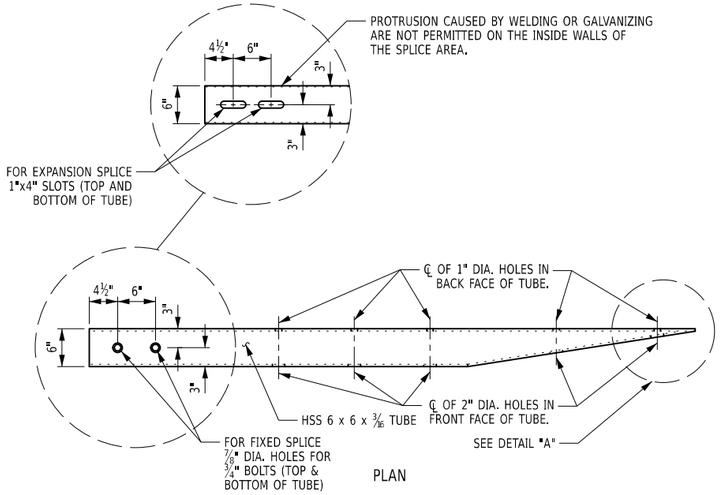

PLAN

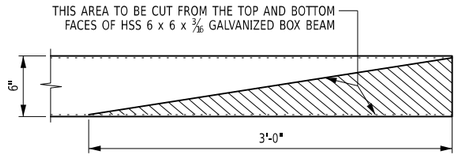

CUT DETAIL - END CONNECTION

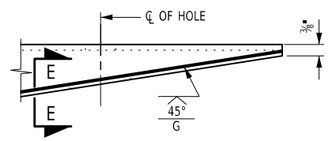

DETAIL "A"

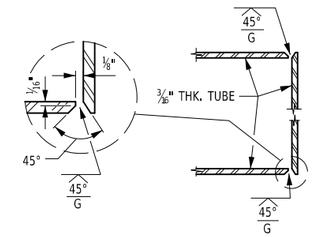

SECTION E-E

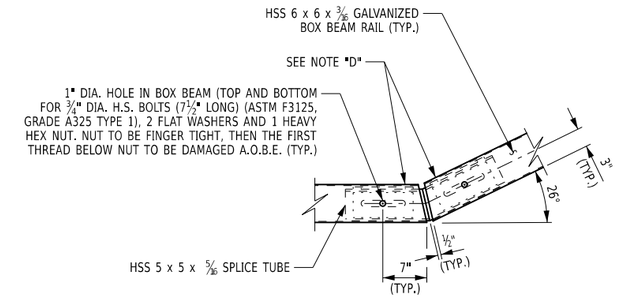

PLAN

SPLICE DETAIL AT TURNBACK IN LOWER TRANSITION GUIDE RAIL

NOTE "D"
PROTRUSIONS CAUSED BY WELDING OR GALVANIZING ARE NOT PERMITTED ON THE ADJOINING SURFACES OF THE BOX BEAM RAILS, SPLICE TUBES, AND FILL PLATES.

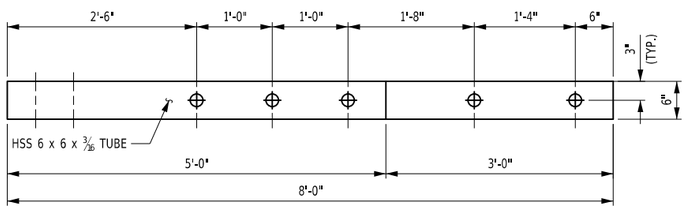

ELEVATION

END CONNECTION FOR BOX BEAM GUIDE RAIL

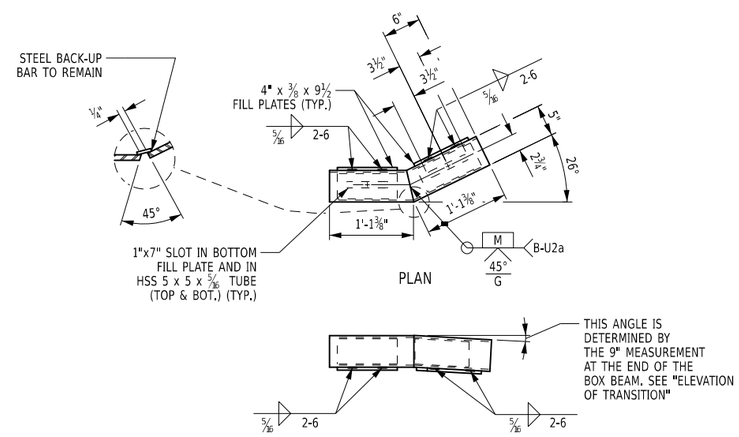

PLAN

ELEVATION

SPLICE TUBE DETAILS FOR TURNBACK

ALTERED ON:	AFFIXED ON: 08/10/2026
SIGNATURE: STAMP:	SIGNATURE: STAMP:

IT IS A VIOLATION OF LAW FOR ANY PERSON, UNLESS THEY ARE ACTING UNDER THE DIRECTION OF A LICENSED PROFESSIONAL ENGINEER, ARCHITECT, LANDSCAPE ARCHITECT, OR LAND SURVEYOR, TO ALTER AN ITEM IN ANY WAY. IF AN ITEM BEARING THE STAMP OF A LICENSED PROFESSIONAL IS ALTERED, THE ALTERING ENGINEER, ARCHITECT, LANDSCAPE ARCHITECT, OR LAND SURVEYOR SHALL STAMP THE DOCUMENT AND INCLUDE THE NOTATION "ALTERED BY" FOLLOWED BY THEIR SIGNATURE, THE DATE OF SUCH ALTERATION, AND A SPECIFIC DESCRIPTION OF THE ALTERATION.

REVISIONS

DATE	DESCRIPTION	BY	SYM.

NEW YORK STATE | Thruway Authority

AECOM

TITLE OF PROJECT SUPERSTRUCTURE REPLACEMENT GSP CONNECTOR OVER NYS THRUWAY	CONTRACT NUMBER: TANY 26-23B
LOCATION OF PROJECT BIN 5514049 (MP 23.53)	DATE: JULY 2026
TITLE OF DRAWING BRIDGE TRANSITION RAILING DETAILS (3 OF 4)	DRAWING NUMBER: ST-58

AICE
CHECKED BY:
IW / MR / VZ
DRAFTED BY:
AICE
CHECKED BY:
DESIGNED BY:
IW / MR / VZ
RWL
DESIGN SUPERVISOR:

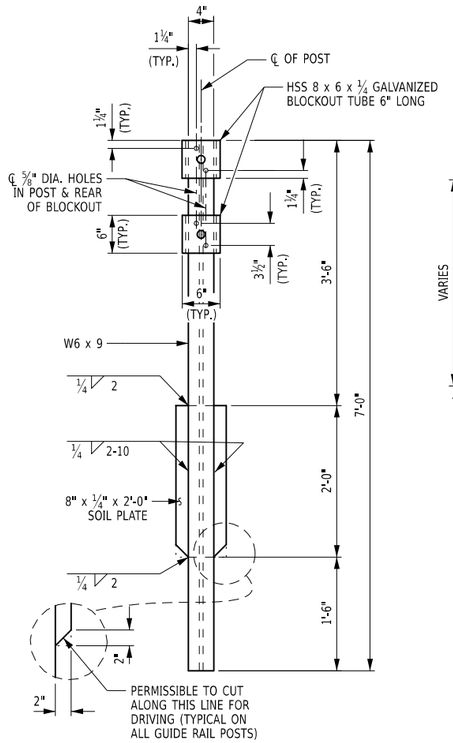

HEAVY POST DETAIL

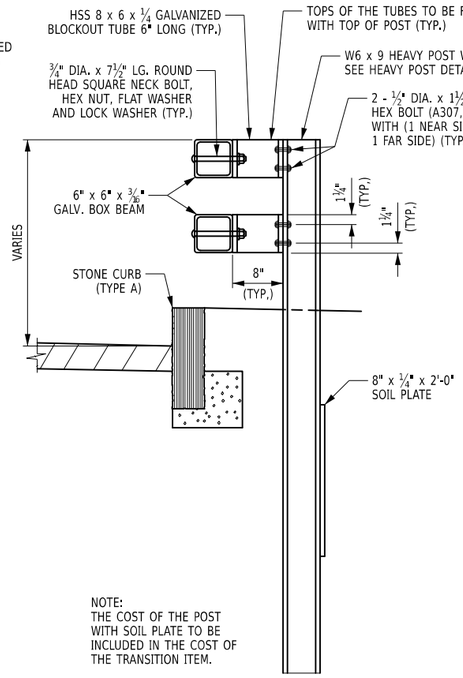

HEAVY POST ELEVATION

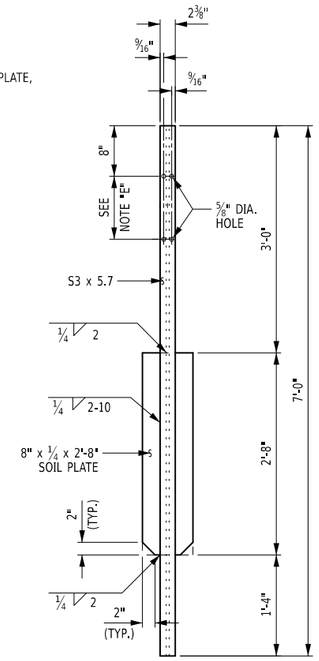

TRANSITION POST DETAIL

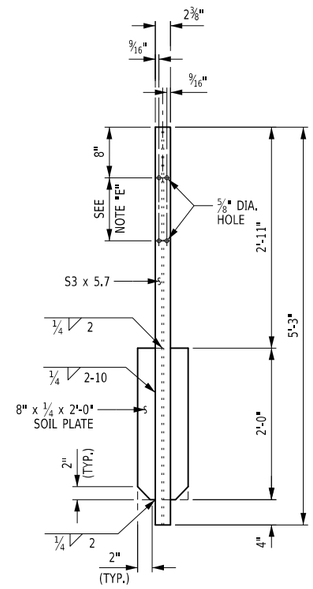

WEAK TRANSITION POST DETAIL

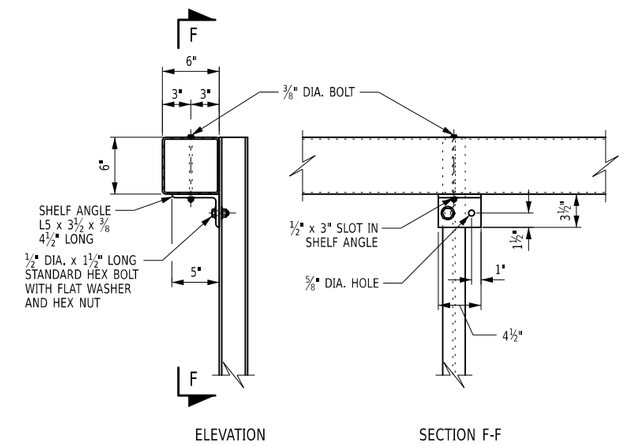

TYPICAL RAIL WEAK TRANSITION POST CONNECTION

NOTES:

NOTE E:
HOLES IN THE POST FOR THE LOWER RAIL MAY BE LOCATED AND DRILLED IN THE FIELD. IF SO, THE GALVANIZING SHALL BE REPAIRED IN ACCORDANCE WITH SUBSECTION 719.01.

ALTERED ON:	AFFIXED ON: 08/10/2026
SIGNATURE: STAMP:	SIGNATURE: STAMP:

STATE OF NEW YORK · EDWIN TWISS · 080650 · LICENSED PROFESSIONAL ENGINEER

IT IS A VIOLATION OF LAW FOR ANY PERSON, UNLESS THEY ARE ACTING UNDER THE DIRECTION OF A LICENSED PROFESSIONAL ENGINEER, ARCHITECT, LANDSCAPE ARCHITECT, OR LAND SURVEYOR, TO ALTER AN ITEM IN ANY WAY. IF AN ITEM BEARING THE STAMP OF A LICENSED PROFESSIONAL IS ALTERED, THE ALTERING ENGINEER, ARCHITECT, LANDSCAPE ARCHITECT, OR LAND SURVEYOR SHALL STAMP THE DOCUMENT AND INCLUDE THE NOTATION "ALTERED BY" FOLLOWED BY THEIR SIGNATURE, THE DATE OF SUCH ALTERATION, AND A SPECIFIC DESCRIPTION OF THE ALTERATION.

REVISIONS

DATE	DESCRIPTION	BY	SYM.

NEW YORK STATE | Thruway Authority

AECOM

TITLE OF PROJECT
SUPERSTRUCTURE REPLACEMENT
GSP CONNECTOR OVER NYS THRUWAY

LOCATION OF PROJECT
BIN 5514049 (MP 23.53)

TITLE OF DRAWING
BRIDGE TRANSITION RAILING DETAILS (4 OF 4)

CONTRACT NUMBER: TANY 26-23B

DATE: JULY 2026

DRAWING NUMBER: ST-59

DESIGN SUPERVISOR: RWL | DESIGNED BY: IW / MR / VZ | DRAFTED BY: AICE | CHECKED BY: IW / MR / VZ | CHECKED BY: AICE

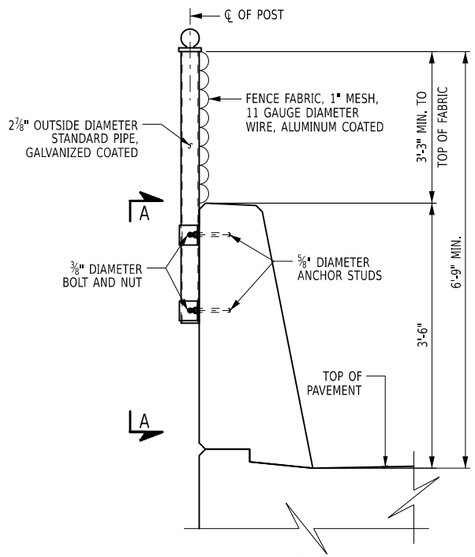

SCREENING ON SINGLE SLOPE BARRIER

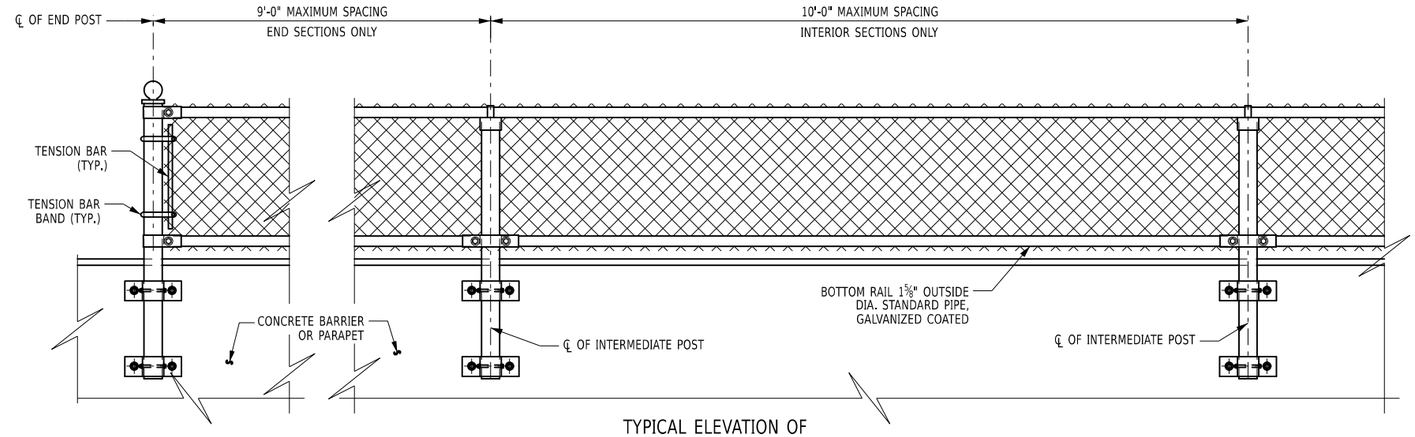

TYPICAL ELEVATION OF PROTECTIVE SCREENING ON CONCRETE BARRIERS/PARAPETS

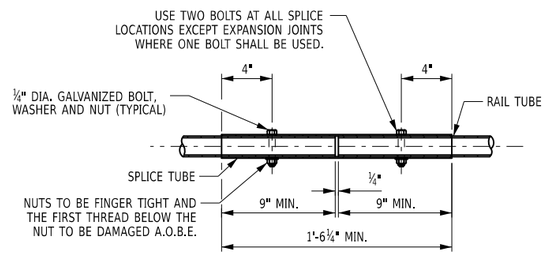

TYPICAL RAIL SPLICE DETAIL

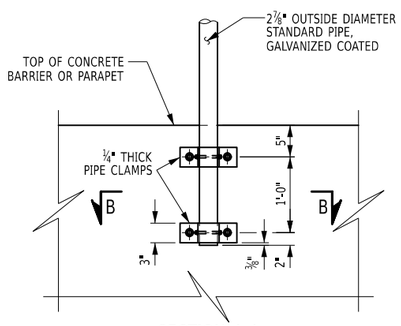

SECTION A-A

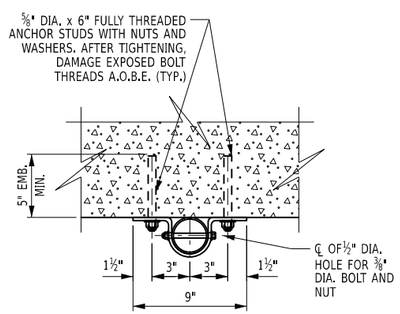

SECTION B-B

NOTES:

1. THE INTERIOR SECTIONS OF PROTECTIVE SCREENING POSTS SHALL BE PLACED SO THAT THE SPACING OF THE POSTS IS UNIFORM AND DOES NOT EXCEED 10'-0".
2. THE FULLY THREADED ANCHOR STUDS FOR THE PROTECTIVE SCREENING POST MAY BE DRILLED AND GROUTED OR PRE-LOCATED AND CAST INTO THE BARRIER OR PARAPET.
3. IT IS PERMISSIBLE TO INSTALL SHIM PLATES BEHIND THE VERTICAL SCREENING POSTS TO ACHIEVE PLUMB. SHIMS MUST HAVE 11/16" DIA. HOLES MATCHING THE PIPE CLAMP FOR THE ⅝" DIA. ANCHOR STUDS. SHIMS SHALL BE OF STAINLESS STEEL (ASTM A666). THE REQUIRED QUANTITY AND THICKNESS OF SHIMS WILL BE DETERMINED IN FIELD.

ALTERED ON:	AFFIXED ON: 08/10/2026
SIGNATURE: STAMP:	SIGNATURE: STAMP: STATE OF NEW YORK · EDWIN TWISS · EXCELSIOR · 080650 · LICENSED PROFESSIONAL ENGINEER

IT IS A VIOLATION OF LAW FOR ANY PERSON, UNLESS THEY ARE ACTING UNDER THE DIRECTION OF A LICENSED PROFESSIONAL ENGINEER, ARCHITECT, LANDSCAPE ARCHITECT, OR LAND SURVEYOR, TO ALTER AN ITEM IN ANY WAY. IF AN ITEM BEARING THE STAMP OF A LICENSED PROFESSIONAL IS ALTERED, THE ALTERING ENGINEER, ARCHITECT, LANDSCAPE ARCHITECT, OR LAND SURVEYOR SHALL STAMP THE DOCUMENT AND INCLUDE THE NOTATION "ALTERED BY" FOLLOWED BY THEIR SIGNATURE, THE DATE OF SUCH ALTERATION, AND A SPECIFIC DESCRIPTION OF THE ALTERATION.

REVISIONS

DATE	DESCRIPTION	BY	SYM.

NEW YORK STATE | Thruway Authority

AECOM

TITLE OF PROJECT: SUPERSTRUCTURE REPLACEMENT GSP CONNECTOR OVER NYS THRUWAY	CONTRACT NUMBER: TANY 26-23B
LOCATION OF PROJECT: BIN 5514049 (MP 23.53)	DATE: JULY 2026
TITLE OF DRAWING: PROTECTIVE SCREENING DETAILS	DRAWING NUMBER: ST-60

AICE | CHECKED BY: | IW / MR / VZ | DRAFTED BY: | AICE | CHECKED BY: | IW / MR / VZ | DESIGNED BY: | RWL | DESIGN SUPERVISOR:

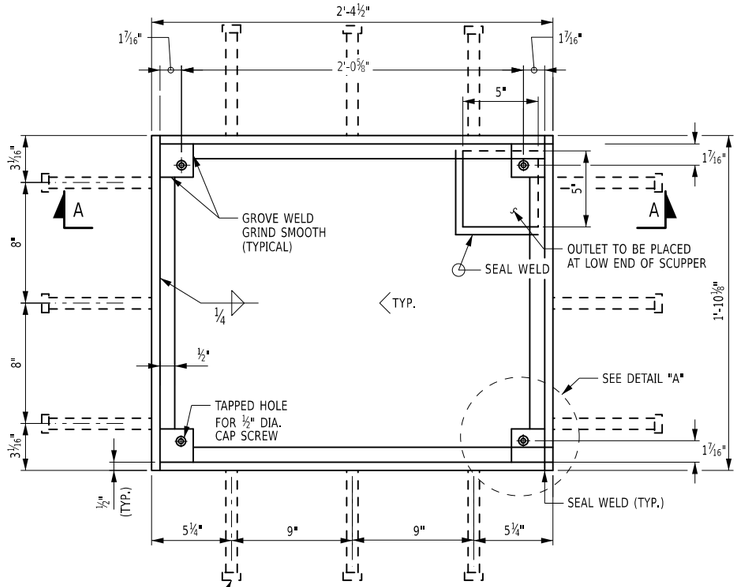

NOTE:

GRATING NOT SHOWN. SEE SCUPPER GRATING DETAIL

PLAN
(SCUPPER AT FASCIA BARRIER SHOWN)

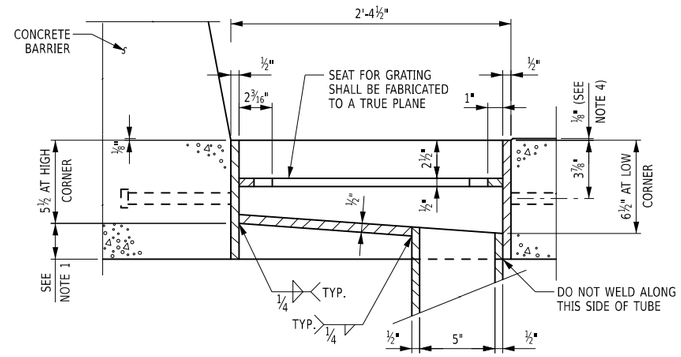

SECTION A-A
(SCUPPER AT FASCIA BARRIER SHOWN)

NOTES:

ALL MATERIAL SHALL BE GALVANIZED IN ACCORDANCE WITH N.Y.S. STANDARD SPECIFICATIONS SUBSECTION 719-01.

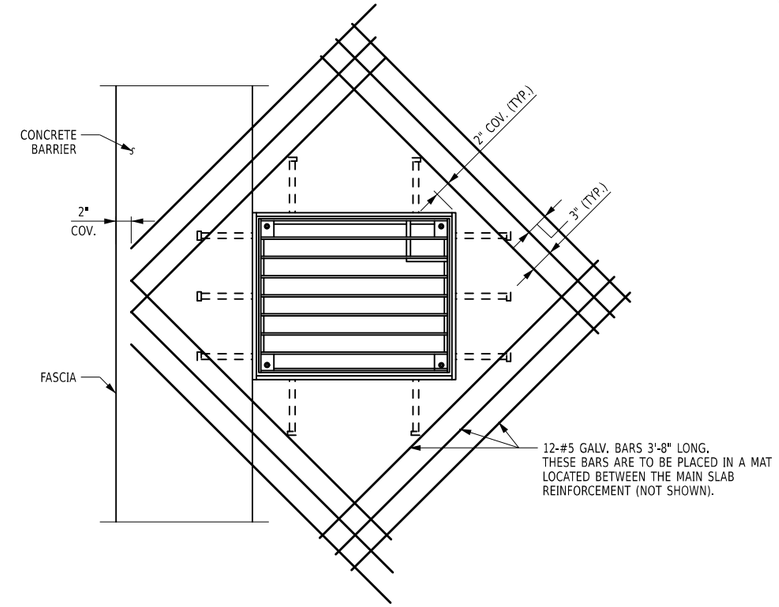

REINFORCEMENT PLAN AT SCUPPERS
(SCUPPER AT FASCIA BARRIER SHOWN)

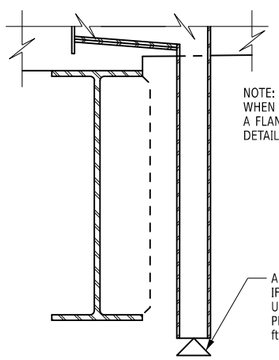

NOTE:
WHEN TYPE "B1" SCUPPERS ARE USED, A FLANGED OUTLET IS USED (SEE DETAIL BELOW).

A REMOVABLE DIFFUSER TO BE USED IF SCUPPER IS LOCATED OVER LAND, UNLESS EROSION PROTECTION IS PROVIDED OR FREE FALL EXCEEDS 25 ft.

DETAILS OF SPILL AREA FOR SCUPPERS
NOT TO SCALE

NOTE:

DOWNSPOUT TO BE EXTENDED 1'-0" BELOW THE BOTTOM OF BOTTOM FLANGE. COST TO BE INCLUDED IN THE PRICE BID FOR THE SCUPPER ITEM.

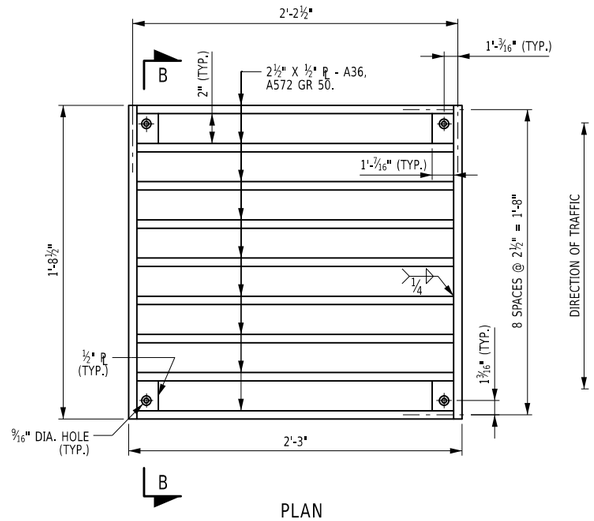

PLAN
(SCUPPER GRATING AT FASCIA BARRIER SHOWN)

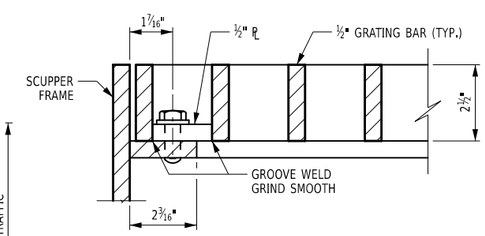

SECTION B-B
(FABRICATED SCUPPER & GRATE)
NOT TO SCALE

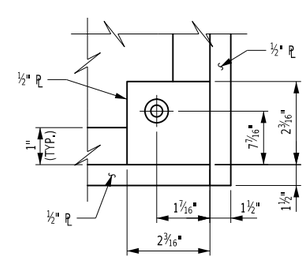

DETAIL "A"
NOT TO SCALE

SCUPPER LOCATION TABLE

#	STATION	OFFSET	TYPE
1	126+29.51	37.27' LT	LEFT FASCIA BARRIER
2	127+58.81	37.27' LT	LEFT FASCIA BARRIER

NOTES:

1. ALL MATERIAL SHALL BE GALVANIZED IN ACCORDANCE WITH N.Y.S. STANDARD SPECIFICATIONS SUBSECTION 719-01.
2. THE SCUPPER MAY BE ROTATED 180° IF THE LOCATION OF THE OUTLET PIPE AS SHOWN WILL INTERFERE WITH OR DRAIN ON ANY PORTION OF THE SUPERSTRUCTURE GIRDERS OR FRAMING.
3. DIMENSION REQUIRED TO LOCATE BOTTOM OF SCUPPER FLUSH TO BOTTOM SURFACE OF SLAB AND TOP OF SCUPPER ⅛" BELOW TOP SURFACE OF SLAB.
4. IF SCUPPERS ARE LOCATED IN HAUNCH AREAS ABOVE BEAMS, THE SCUPPERS SHALL BE BLOCKED UP OFF THE FORMS SO AS TO LOCATE TOP OF SCUPPER BELOW TOP SURFACE OF SLAB AS SHOWN.
5. STRUCTURAL SLAB CONCRETE IMMEDIATELY ADJACENT TO SCUPPERS SHALL BE THOROUGHLY VIBRATED DURING PLACEMENT TO ELIMINATE VOIDS WHICH COULD RESULT IN PREMATURE CONCRETE DETERIORATION.
6. IN CERTAIN CASES, THE SCUPPER DIMENSION SHOWN PERPENDICULAR TO THE CURB WILL BE INSUFFICIENT TO LOCATE THE DOWNSPOUT INSIDE THE FASCIA BEAM. IN THESE CASES, A LARGER SCUPPER, REQUIRING SPECIAL DETAILS, WILL BE REQUIRED.
7. DETAILS ON THE DRAWINGS LABELED AS "NOT TO SCALE" ARE PROPORTIONAL AND ARE FULLY DIMENSIONED. INTENTIONALLY DRAWN NOT TO SCALE FOR VISUAL CLARITY. ALL OTHER DETAILS, FOR WHICH NO SCALE IS SHOWN, ARE DRAWN.
8. UNLESS NOTED OTHERWISE, ALL WORK ON THIS DWG. SHALL BE INCLUDED IN ITEM 576.02, SCUPPERS (TYPE B).
9. GRATING SHALL BE INCLUDED IN THE UNIT PRICE BID FOR THE SCUPPER ITEM.

ALTERED ON:	AFFIXED ON: 08/10/2026
SIGNATURE: STAMP:	SIGNATURE: STAMP: STATE OF NEW YORK · EDWIN TWISS · EXCELSIOR · 080650 · LICENSED PROFESSIONAL ENGINEER

IT IS A VIOLATION OF LAW FOR ANY PERSON, UNLESS THEY ARE ACTING UNDER THE DIRECTION OF A LICENSED PROFESSIONAL ENGINEER, ARCHITECT, LANDSCAPE ARCHITECT, OR LAND SURVEYOR, TO ALTER AN ITEM IN ANY WAY. IF AN ITEM BEARING THE STAMP OF A LICENSED PROFESSIONAL IS ALTERED, THE ALTERING ENGINEER, ARCHITECT, LANDSCAPE ARCHITECT, OR LAND SURVEYOR SHALL STAMP THE DOCUMENT AND INCLUDE THE NOTATION "ALTERED BY" FOLLOWED BY THEIR SIGNATURE, THE DATE OF SUCH ALTERATION, AND A SPECIFIC DESCRIPTION OF THE ALTERATION.

REVISIONS

DATE	DESCRIPTION	BY	SYM.

NEW YORK STATE | Thruway Authority

AECOM

TITLE OF PROJECT: SUPERSTRUCTURE REPLACEMENT GSP CONNECTOR OVER NYS THRUWAY

LOCATION OF PROJECT: BIN 5514049 (MP 23.53)

TITLE OF DRAWING: MISCELLANEOUS DETAILS (1 OF 2)

CONTRACT NUMBER: TANY 26-23B

DATE: JULY 2026

DRAWING NUMBER: ST-61

AICE | CHECKED BY: | IW / MR / VZ | DRAFTED BY: | AICE | CHECKED BY: | IW / MR / VZ | DESIGNED BY: | RWL | DESIGN SUPERVISOR:

CONSTRUCTION AND CONTRACTION JOINTS		
C	B	T/3
3/16"	1 1/2"	0" TO 6"
3/8"	3 1/2"	6" TO 10"
3/4"	5 1/2"	10" AND OVER

EXPANSION JOINTS		
C	B	T/3
3/8"	3 1/2"	0 TO 10"
3/4"	5 1/2"	10" AND OVER

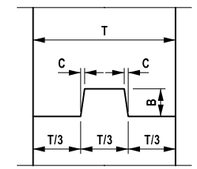

NOTE:
WATERSTOP NOT SHOWN.

VERTICAL

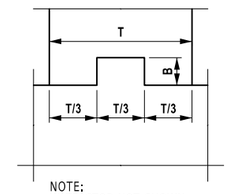

NOTE:
WATERSTOP NOT SHOWN.

HORIZONTAL

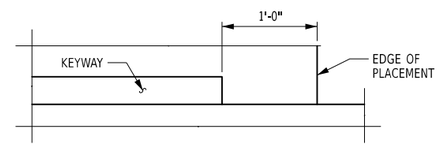

KEYWAY DETAILS
NOT TO SCALE

DESIGN SUPERVISOR: RWL
DESIGNED BY: IW / MR / VZ
CHECKED BY: IW / MR / VZ
DRAFTED BY: AICE
CHECKED BY: AICE

ALTERED ON:	AFFIXED ON: 08/10/2026
SIGNATURE: STAMP:	SIGNATURE: STAMP:

IT IS A VIOLATION OF LAW FOR ANY PERSON, UNLESS THEY ARE ACTING UNDER THE DIRECTION OF A LICENSED PROFESSIONAL ENGINEER, ARCHITECT, LANDSCAPE ARCHITECT, OR LAND SURVEYOR, TO ALTER AN ITEM IN ANY WAY. IF AN ITEM BEARING THE STAMP OF A LICENSED PROFESSIONAL IS ALTERED, THE ALTERING ENGINEER, ARCHITECT, LANDSCAPE ARCHITECT, OR LAND SURVEYOR SHALL STAMP THE DOCUMENT AND INCLUDE THE NOTATION "ALTERED BY" FOLLOWED BY THEIR SIGNATURE, THE DATE OF SUCH ALTERATION, AND A SPECIFIC DESCRIPTION OF THE ALTERATION.

REVISIONS

DATE	DESCRIPTION	BY	SYM.

NEW YORK STATE | Thruway Authority

AECOM

TITLE OF PROJECT
SUPERSTRUCTURE REPLACEMENT
GSP CONNECTOR OVER NYS THRUWAY

LOCATION OF PROJECT
BIN 5514049 (MP 23.53)

TITLE OF DRAWING
MISCELLANEOUS DETAILS
(2 OF 2)

CONTRACT NUMBER: TANY 26-23B

DATE: JULY 2026

DRAWING NUMBER: ST-62

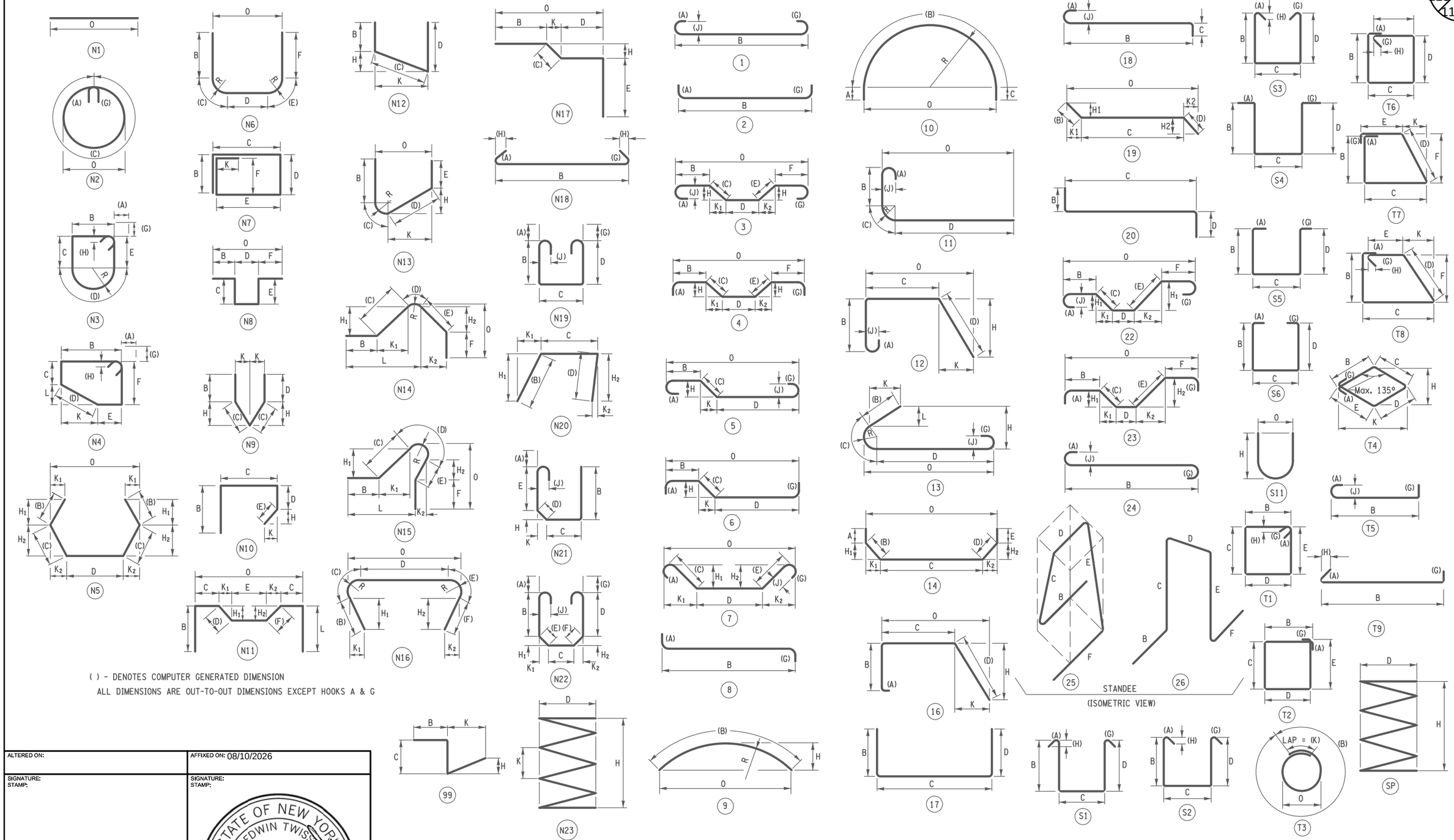

( ) - DENOTES COMPUTER GENERATED DIMENSION

ALL DIMENSIONS ARE OUT-TO-OUT DIMENSIONS EXCEPT HOOKS A & G

AICE
CHECKED BY:
IW / MR / VZ
DRAFTED BY:
AICE
CHECKED BY:
IW / MR / VZ
DESIGNED BY:
RWL
DESIGN SUPERVISOR:

ALTERED ON:	AFFIXED ON: 08/10/2026
SIGNATURE: STAMP:	SIGNATURE: STAMP: STATE OF NEW YORK · EDWIN TWISS · 080650 · LICENSED PROFESSIONAL ENGINEER

IT IS A VIOLATION OF LAW FOR ANY PERSON, UNLESS THEY ARE ACTING UNDER THE DIRECTION OF A LICENSED PROFESSIONAL ENGINEER, ARCHITECT, LANDSCAPE ARCHITECT, OR LAND SURVEYOR, TO ALTER AN ITEM IN ANY WAY. IF AN ITEM BEARING THE STAMP OF A LICENSED PROFESSIONAL IS ALTERED, THE ALTERING ENGINEER, ARCHITECT, LANDSCAPE ARCHITECT, OR LAND SURVEYOR SHALL STAMP THE DOCUMENT AND INCLUDE THE NOTATION "ALTERED BY" FOLLOWED BY THEIR SIGNATURE, THE DATE OF SUCH ALTERATION, AND A SPECIFIC DESCRIPTION OF THE ALTERATION.

REVISIONS

DATE	DESCRIPTION	BY	SYM.

NEW YORK STATE | Thruway Authority

AECOM

TITLE OF PROJECT
SUPERSTRUCTURE REPLACEMENT
GSP CONNECTOR OVER NYS THRUWAY

LOCATION OF PROJECT
BIN 5514049 (MP 23.53)

TITLE OF DRAWING
BAR BENDING DIAGRAGM

CONTRACT NUMBER: TANY 26-23B

DATE: JULY 2026

DRAWING NUMBER: ST-63

MARK	NO.	LENGTH	TYPE	WEIGHT	A	B	C	D	E	F	G	H/H1	H2	J	K/K1	K2	L	O	R
BEGIN ABUTMENT																			
STAGE 1																			
STEM																			
5AG1	46	4-4	17	208		1-4	3-0	0-0											
8AG2	7	32-9	N1	612														32-9	
5AG6	32	3-6	2	116	0-9¾	2-8					0-0								
SUBTOTAL GALV. BARS				936	LB THIS POUR														
BAL WINGWALL																			
5AG10	22	3-2	17	73		0-0	1-6	1-8											
5AG11	2	14-10	N1	31														14-10	
SUBTOTAL GALV. BARS				104	LB THIS POUR														
PEDESTALS																			
5AG9	12	10-1	T1	126	0-6½	2-6	2-0	2-6	2-0		0-6½	0-3¾							
SUBTOTAL GALV. BARS				126	LB THIS POUR														
BACKWALL																			
6AG20	16	30-7	N1	735														30-7¼	
6AG24	47	18-12	22	1338	0-7¾	2-10½	15-5	0-0	0-0	0-0	0-0	7-9	0-0	0-6	13-4	0-0		16-2½	
5AG25	43	6-8	17	299		3-8	3-0	0-0											
5AG26	47	4-9	17	233		0-0	3-4	1-5											
5AG27	47	8-1	17	396		3-4	1-5	3-4											
5AG28	24	4-2	1	104	0-7	3-0					0-7			0-5					
6AG29	6	6-10	17	61		2-9	1-3¾	2-9											
SUBTOTAL GALV. BARS				3166	LB THIS POUR														
STAGE 2																			
STEM																			
5AG1	34	4-4	17	154		1-4	3-0	0-0											
8AG3	7	23-7	N1	440														23-6½	
5AG6	24	3-6	2	87	0-9¾	2-8					0-0								
SUBTOTAL GALV. BARS				681	LB THIS POUR														
PEDESTALS																			
5AG9	8	10-1	T1	84	0-6½	2-6	2-0	2-6	2-0		0-6½	0-3¾							
SUBTOTAL GALV. BARS				84	LB THIS POUR														
BACKWALL																			
6AG22	16	23-5	N1	563														23-5	
6AG24	32	18-12	22	911	0-7¾	2-10½	15-5	0-0	0-0	0-0	0-0	7-9	0-0	0-6	13-4	0-0		16-2½	
5AG25	28	6-8	17	195		3-8	3-0	0-0											
5AG26	32	4-9	17	159		0-0	1-5	3-4											
5AG27	32	8-1	17	270		3-4	1-5	3-4											

MARK	NO.	LENGTH	TYPE	WEIGHT	A	B	C	D	E	F	G	H/H1	H2	J	K/K1	K2	L	O	R
5AG28	17	4-2	1	74	0-7	3-0					0-7			0-5					
SUBTOTAL GALV. BARS				2170	LB THIS POUR														
CLOSURE POUR																			
BACKWALL																			
6AG21	16	2-1	N1	50														2-1	
6AG24	4	18-12	22	114	0-7¾	2-10½	15-5	0-0	0-0	0-0	0-0	7-9	0-0	0-6	13-4	0-0		16-2½	
5AG25	4	6-8	17	28		3-8	3-0	0-0											
5AG26	4	4-9	17	20		0-0	3-4	1-5											
5AG27	4	8-1	17	34		3-4	1-5	3-4											
5AG28	2	4-2	1	9	0-7	3-0					0-7			0-5					
SUBTOTAL GALV. BARS				254	LB THIS POUR														
STAGE 3																			
STEM																			
5AG1	34	4-4	17	154		1-4	3-0	0-0											
8AG4	7	23-7	N1	441														23-7	
5AG6	24	3-6	2	87	0-9¾	2-8					0-0								
SUBTOTAL GALV. BARS				682	LB THIS POUR														
PEDESTALS																			
5AG9	5	10-1	T1	53	0-6½	2-6	2-0	2-6	2-0		0-6½	0-3¾							
SUBTOTAL GALV. BARS				53	LB THIS POUR														
BACKWALL																			
6AG23	16	23-5	N1	563														23-5	
6AG24	33	18-12	22	939	0-7¾	2-10½	15-5	0-0	0-0	0-0	0-0	7-9	0-0	0-6	13-4	0-0		16-2½	
5AG25	29	6-8	17	202		3-8	3-0	0-0											
5AG26	33	4-9	17	163		0-0	3-4	1-5											
5AG27	33	8-1	17	278		3-4	1-5	3-4											
5AG28	17	4-2	1	74	0-7	3-0					0-7			0-5					
6AG29	6	6-10	17	61		2-9	1-3¾	2-9											
SUBTOTAL GALV. BARS				2280	LB THIS POUR														
CLOSURE POUR																			
BACKWALL																			
6AG21	16	2-1	N1	50														2-1	
6AG24	4	18-12	22	114	0-7¾	2-10½	15-5	0-0	0-0	0-0	0-0	7-9	0-0	0-6	13-4	0-0		16-2½	
5AG25	4	6-8	17	28		3-8	3-0	0-0											
5AG26	4	4-9	17	20		0-0	3-4	1-5											
5AG27	4	8-1	17	34		3-4	1-5	3-4											
5AG28	2	4-2	1	9	0-7	3-0					0-7			0-5					
SUBTOTAL GALV. BARS				254	LB THIS POUR														
PIER - 1																			
STAGE 1																			
PEDESTALS																			
5PG1	32	3-12	2	132	0-9¾	3-1¾					0-0								
5PG2	17	13-5	T1	238	0-6½	2-10	3-4	2-10	3-4		0-6½	0-3¾							
4PG3	4	30-11	N1	82														30-10½	

ALTERED ON:

AFFIXED ON: 08/10/2026

SIGNATURE:
STAMP:

SIGNATURE:
STAMP:

STATE OF NEW YORK
EDWIN TWISS
080650
LICENSED PROFESSIONAL ENGINEER

IT IS A VIOLATION OF LAW FOR ANY PERSON, UNLESS THEY ARE ACTING UNDER THE DIRECTION OF A LICENSED PROFESSIONAL ENGINEER, ARCHITECT, LANDSCAPE ARCHITECT, OR LAND SURVEYOR, TO ALTER AN ITEM IN ANY WAY. IF AN ITEM BEARING THE STAMP OF A LICENSED PROFESSIONAL IS ALTERED, THE ALTERING ENGINEER, ARCHITECT, LANDSCAPE ARCHITECT, OR LAND SURVEYOR SHALL STAMP THE DOCUMENT AND INCLUDE THE NOTATION "ALTERED BY" FOLLOWED BY THEIR SIGNATURE, THE DATE OF SUCH ALTERATION, AND A SPECIFIC DESCRIPTION OF THE ALTERATION.

REVISIONS

DATE	DESCRIPTION	BY	SYM.

NEW YORK STATE | Thruway Authority

AECOM

TITLE OF PROJECT
SUPERSTRUCTURE REPLACEMENT
GSP CONNECTOR OVER NYS THRUWAY

LOCATION OF PROJECT
BIN 5514049 (MP 23.53)

TITLE OF DRAWING
BAR LIST (1 OF 5)

CONTRACT NUMBER: TANY 26-23B

DATE: JULY 2026

DRAWING NUMBER: ST-64

DESIGN SUPERVISOR: RWL
DESIGNED BY: IW / MR / VZ
CHECKED BY: AICE
DRAFTED BY: IW / MR / VZ
CHECKED BY: AICE

MARK	NO.	LENGTH	TYPE	WEIGHT	A	B	C	D	E	F	G	H/H1	H2	J	K/K1	K2	L	O	R
SUBTOTAL GALV. BARS				453	LB THIS FOUR														
STAGE 2																			
PEDESTALS																			
5PG1	24	3-12	2	99	0-9¾	3-1¾					0-0								
5PG2	12	13-5	T1	168	0-6½	2-10	3-4	2-10	3-4		0-6½	0-3¾							
4PG4	4	25-10	N1	69														25-9½	
SUBTOTAL GALV. BARS				336	LB THIS FOUR														
STAGE 3																			
PEDESTALS																			
5PG1	24	3-12	2	99	0-9¾	3-1¾					0-0								
5PG2	8	13-5	T1	112	0-6½	2-10	3-4	2-10	3-4		0-6½	0-3¾							
4PG5	4	27-10	N1	74														27-9½	
SUBTOTAL GALV. BARS				285	LB THIS FOUR														
PIER - 2																			
STAGE 1																			
PEDESTALS																			
5PG1	32	3-12	2	132	0-9¾	3-1¾					0-0								
5PG2	16	13-5	T1	224	0-6½	2-10	3-4	2-10	3-4		0-6½	0-3¾							
4PG3	4	30-11	N1	82														30-10½	
SUBTOTAL GALV. BARS				439	LB THIS FOUR														
STAGE 2																			
PEDESTALS																			
5PG1	24	3-12	2	99	0-9¾	3-1¾					0-0								
5PG2	11	13-5	T1	154	0-6½	2-10	3-4	2-10	3-4		0-6½	0-3¾							
4PG4	4	25-10	N1	69														25-9½	
SUBTOTAL GALV. BARS				322	LB THIS FOUR														
STAGE 3																			
PEDESTALS																			
5PG1	24	3-12	2	99	0-9¾	3-1¾					0-0								
5PG2	8	13-5	T1	112	0-6½	2-10	3-4	2-10	3-4		0-6½	0-3¾							
4PG5	4	27-10	N1	74														27-9½	
SUBTOTAL GALV. BARS				285	LB THIS FOUR														
PIER - 3																			
STAGE 1																			
PEDESTALS																			
5PG1	32	3-12	2	132	0-9¾	3-1¾					0-0								
5PG2	16	13-5	T1	224	0-6½	2-10	3-4	2-10	3-4		0-6½	0-3¾							
4PG3	4	30-11	N1	82														30-10½	
SUBTOTAL GALV. BARS				439	LB THIS FOUR														

MARK	NO.	LENGTH	TYPE	WEIGHT	A	B	C	D	E	F	G	H/H1	H2	J	K/K1	K2	L	O	R
STAGE 2																			
PEDESTALS																			
5PG1	24	3-12	2	99	0-9¾	3-1¾					0-0								
5PG2	11	13-5	T1	154	0-6½	2-10	3-4	2-10	3-4		0-6½	0-3¾							
4PG4	4	25-10	N1	69														25-9½	
SUBTOTAL GALV. BARS				322	LB THIS FOUR														
STAGE 3																			
PEDESTALS																			
5PG1	24	3-12	2	99	0-9¾	3-1¾					0-0								
5PG2	11	13-5	T1	154	0-6½	2-10	3-4	2-10	3-4		0-6½	0-3¾							
4PG4	4	25-10	N1	69														25-9½	
SUBTOTAL GALV. BARS				322	LB THIS FOUR														
STAGE 3																			
PEDESTALS																			
5PG1	24	3-12	2	99	0-9¾	3-1¾					0-0								
5PG2	8	13-5	T1	112	0-6½	2-10	3-4	2-10	3-4		0-6½	0-3¾							
4PG5	4	27-10	N1	74														27-9½	
SUBTOTAL GALV. BARS				285	LB THIS FOUR														
END ABUTMENT																			
STAGE 1																			
STEM																			
8AG2	8	32-9	N1	699														32-9	
5AG6	32	3-6	2	116	0-9¾	2-8					0-0								
5AG14	46	5-0	17	240		1-4	3-8	0-0											
SUBTOTAL GALV. BARS				1056	LB THIS FOUR														
PEDESTALS																			
5AG9	13	10-1	T1	137	0-6½	2-6	2-0	2-6	2-0		0-6½	0-3¾							
SUBTOTAL GALV. BARS				137	LB THIS FOUR														
BACKWALL																			
6AG20	16	30-7	N1	735														30-7	
6AG24	47	18-12	22	1338	0-7¾	2-10½	15-5	0-0	0-0	0-0	0-0	7-9	0-0	0-6	13-4	0-0		16-2½	
5AG25	43	6-8	17	299		3-8	3-0	0-0											
5AG26	47	4-9	17	233		0-0	3-4	1-5											
5AG27	47	8-1	17	396		3-4	1-5	3-4											
5AG28	24	4-2	1	104	0-7	3-0					0-7			0-5					
6AG29	6	6-10	17	61		2-9	1-3¾	2-9											
SUBTOTAL GALV. BARS				3166	LB THIS FOUR														
EAL WINGWALL																			
5AG10	16	3-2	17	53		0-0	1-6	1-8											
5AG12	2	8-9	N1	18														8-9	
SUBTOTAL GALV. BARS				71	LB THIS FOUR														
STAGE 2																			
STEM																			
8AG3	8	23-7	N1	503														23-6½	
5AG6	24	3-6	2	87	0-9¾	2-8					0-0								
5AG14	34	5-0	17	177		1-4	3-8	0-0											
SUBTOTAL GALV. BARS				767	LB THIS FOUR														

AICE
CHECKED BY:
IW / MR / VZ
DRAFTED BY:
AICE
CHECKED BY:
IW / MR / VZ
DESIGNED BY:
RWL
DESIGN SUPERVISOR:

ALTERED ON:

AFFIXED ON: 08/10/2026

SIGNATURE:
STAMP:

SIGNATURE:
STAMP:

IT IS A VIOLATION OF LAW FOR ANY PERSON, UNLESS THEY ARE ACTING UNDER THE DIRECTION OF A LICENSED PROFESSIONAL ENGINEER, ARCHITECT, LANDSCAPE ARCHITECT, OR LAND SURVEYOR, TO ALTER AN ITEM IN ANY WAY. IF AN ITEM BEARING THE STAMP OF A LICENSED PROFESSIONAL IS ALTERED, THE ALTERING ENGINEER, ARCHITECT, LANDSCAPE ARCHITECT, OR LAND SURVEYOR SHALL STAMP THE DOCUMENT AND INCLUDE THE NOTATION "ALTERED BY" FOLLOWED BY THEIR SIGNATURE, THE DATE OF SUCH ALTERATION, AND A SPECIFIC DESCRIPTION OF THE ALTERATION.

REVISIONS

DATE	DESCRIPTION	BY	SYM.

NEW YORK STATE | Thruway Authority

AECOM

TITLE OF PROJECT
SUPERSTRUCTURE REPLACEMENT
GSP CONNECTOR OVER NYS THRUWAY

LOCATION OF PROJECT
BIN 5514049 (MP 23.53)

TITLE OF DRAWING
BAR LIST (2 OF 5)

CONTRACT NUMBER:
TANY 26-23B

DATE:
JULY 2026

DRAWING NUMBER:
ST-65

MARK	NO.	LENGTH	TYPE	WEIGHT	A	B	C	D	E	F	G	H/H1	H2	J	K/K1	K2	L	O	R
PEDESTALS																			
5AG9	9	10-1	T1	95	0-6½	2-6	2-0	2-6	2-0		0-6½	0-3¾							
SUBTOTAL GALV. BARS				95	LB THIS FOUR														
BACKWALL																			
6AG22	16	23-5	N1	563														23-5	
6AG24	32	18-12	22	911	0-7¾	2-10½	15-5	0-0	0-0	0-0	0-0	7-9	0-0	0-6	13-4	0-0		16-2½	
5AG25	27	6-8	17	188		3-8	3-0	0-0											
5AG26	32	4-9	17	159		0-0	3-4	1-5											
5AG27	32	8-1	17	270		3-4	1-5	3-4											
5AG28	17	4-2	1	74	0-7	3-0					0-7			0-5					
SUBTOTAL GALV. BARS				2163	LB THIS FOUR														
CLOSURE POUR																			
BACKWALL																			
6AG21	16	2-1	N1	50														2-1	
6AG24	4	18-12	22	114	0-7¾	2-10½	15-5	0-0	0-0	0-0	0-0	7-9	0-0	0-6	13-4	0-0		16-2½	
5AG25	4	6-8	17	28		3-8	3-0	0-0											
5AG26	4	4-9	17	20		0-0	3-4	1-5											
5AG27	4	8-1	17	34		3-4	1-5	3-4											
5AG28	2	4-2	1	9	0-7	3-0					0-7			0-5					
SUBTOTAL GALV. BARS				254	LB THIS FOUR														
STAGE 3																			
STEM																			
8AG5	8	23-3	N1	496														23-2½	
5AG6	24	3-6	2	87	0-9¾	2-8					0-0								
5AG14	32	5-0	17	167		1-4	3-8	0-0											
SUBTOTAL GALV. BARS				750	LB THIS FOUR														
PEDESTALS																			
5AG9	5	10-1	T1	53	0-6½	2-6	2-0	2-6	2-0		0-6½	0-3¾							
SUBTOTAL GALV. BARS				53	LB THIS FOUR														
BACKWALL																			
6AG23	16	23-5	N1	563														23-5	
6AG24	33	18-12	22	939	0-7¾	2-10½	15-5	0-0	0-0	0-0	0-0	7-9	0-0	0-6	13-4	0-0		16-2½	
5AG25	29	6-8	17	202		3-8	3-0	0-0											
5AG26	33	4-9	17	163		0-0	3-4	1-5											
5AG27	33	8-1	17	278		3-4	1-5	3-4											
5AG28	17	4-2	1	74	0-7	3-0					0-7			0-5					
6AG29	6	6-11	17	62		2-9	1-5	2-9											
SUBTOTAL GALV. BARS				2281	LB THIS FOUR														

MARK	NO.	LENGTH	TYPE	WEIGHT	A	B	C	D	E	F	G	H/H1	H2	J	K/K1	K2	L	O	R
CLOSURE POURS																			
BACKWALL																			
6AG21	16	2-1	N1	50														2-1	
6AG24	4	18-12	22	114	0-7¾	2-10½	15-5	0-0	0-0	0-0	0-0	7-9	0-0	0-6	13-4	0-0		16-2½	
5AG25	4	6-8	17	28		3-8	3-0	0-0											
5AG26	4	4-9	17	20		0-0	3-4	1-5											
5AG27	4	8-1	17	34		3-4	1-5	3-4											
5AG28	2	4-2	1	9	0-7	3-0					0-7			0-5					
SUBTOTAL GALV. BARS				254	LB THIS FOUR														
SUPERSTRUCTURE SLAB																			
STAGE 1																			
4SG3	623	38-8	N1	16081														38-7¾	
6SG4	389	11-2	1	6494	0-7¾	10-5½					0-0			0-6					
5SG5	42	39-0	N1	1708														39-0	
6SG6	132	40-0	N1	7930														40-0	
6SG7	44	34-3	N1	2263														34-3	
6SG8	44	18-3	N1	1206														18-3	
4SG17	391	30-8	N1	8009														30-8	
4SG18	390	31-4	1	8155	0-6	30-9¾					0-0			0-4¼					
SUBTOTAL GALV. BARS				51846	LB THIS FOUR														
STAGE 2																			
4SG3	455	38-8	N1	11745														38-7¾	
6SG6	96	40-0	N1	5767														40-0	
6SG7	32	34-3	N1	1646														34-3	
6SG8	32	18-3	N1	877														18-3	
4SG15	781	23-2	N1	12085														23-2	
SUBTOTAL GALV. BARS				32120	LB THIS FOUR														
CLOSURE POUR																			
4SG3	49	38-8	N1	1265														38-7¾	
6SG6	12	40-0	N1	721														40-0	
6SG7	4	34-3	N1	206														34-3	
6SG8	4	18-3	N1	110														18-3	
4SG11	781	2-1	N1	1087														2-1	
SUBTOTAL GALV. BARS				3388	LB THIS FOUR														
STAGE 3																			
4SG1	391	23-2	N1	6050														23-2	
4SG2	390	23-8	1	6163	0-6	23-2					0-0			0-4¼					
4SG3	427	38-8	N1	11022														38-7¾	
6SG4	389	5-3	1	3061	0-7¾	4-7					0-0			0-6					
5SG5	42	39-0	N1	1708														39-0	
6SG6	90	40-0	N1	5407														40-0	
6SG7	30	34-3	N1	1543														34-3	
6SG8	30	18-3	N1	822														18-3	
SUBTOTAL GALV. BARS				35776	LB THIS FOUR														
CLOSURE POUR																			
4SG3	49	38-8	N1	1265														38-7¾	

ALTERED ON:

AFFIXED ON: 08/10/2026

SIGNATURE:
STAMP:

SIGNATURE:
STAMP:

STATE OF NEW YORK
EDWIN TWISS
EXCELSIOR
080650
LICENSED PROFESSIONAL ENGINEER

IT IS A VIOLATION OF LAW FOR ANY PERSON, UNLESS THEY ARE ACTING UNDER THE DIRECTION OF A LICENSED PROFESSIONAL ENGINEER, ARCHITECT, LANDSCAPE ARCHITECT, OR LAND SURVEYOR, TO ALTER AN ITEM IN ANY WAY. IF AN ITEM BEARING THE STAMP OF A LICENSED PROFESSIONAL IS ALTERED, THE ALTERING ENGINEER, ARCHITECT, LANDSCAPE ARCHITECT, OR LAND SURVEYOR SHALL STAMP THE DOCUMENT AND INCLUDE THE NOTATION "ALTERED BY" FOLLOWED BY THEIR SIGNATURE, THE DATE OF SUCH ALTERATION, AND A SPECIFIC DESCRIPTION OF THE ALTERATION.

REVISIONS

DATE	DESCRIPTION	BY	SYM.

NEW YORK STATE | Thruway Authority

AECOM

TITLE OF PROJECT
SUPERSTRUCTURE REPLACEMENT
GSP CONNECTOR OVER NYS THRUWAY

LOCATION OF PROJECT
BIN 5514049 (MP 23.53)

TITLE OF DRAWING
BAR LIST (3 OF 5)

CONTRACT NUMBER:
TANY 26-23B

DATE:
JULY 2026

DRAWING NUMBER:
ST-66

AICE
CHECKED BY:
IW / MR / VZ
DRAFTED BY:
AICE
CHECKED BY:
IW / MR / VZ
DESIGNED BY:
RWL
DESIGN SUPERVISOR:

MARK	NO.	LENGTH	TYPE	WEIGHT	A	B	C	D	E	F	G	H/H1	H2	J	K/K1	K2	L	O	R
6SG6	12	40-0	N1	721														40-0	
6SG7	4	34-3	N1	206														34-3	
6SG8	4	18-3	N1	110														18-3	
4SG11	781	2-1	N1	1087														2-1	
SUBTOTAL	GALV.	BARS		3388	LB THIS FOUR														
BEGIN APPROACH SLAB																			
STAGE 1																			
5HG1	15	31-2	N1	488														31-2	
		AVG.																AVG.	
5HG2	6	19-1	N1	119														19-0½	
5HG2	O	VARIES	FROM		29-2	TO	8-11	(2	SETS OF	3)									
5HG3	2	31-3	N1	65														31-3	
		AVG.																AVG.	
5HG4	45	16-10	N1	790														16-10	
5HG4	O	VARIES	FROM		18-4	TO	15-4	(1	SET OF	45)									
		AVG.				AVG.													
6HG5	45	17-6	1	1182	0-7¾	16-10					0-0			0-6					
6HG5	B	VARIES	FROM		18-4	TO	15-4	(1	SET OF	45)									
6HG6	24	11-12	1	431	0-7¾	11-3¾					0-0			0-6					
5HG7	24	4-2	17	104		0-0	2-1	2-1											
5HG8	6	15-4	N1	96														15-4	
4HG9	2	14-11	N1	20														14-11	
5HG23	15	31-9	1	497	0-7	31-2					0-0			0-5					
4HG24	16	1-10	20	20		0-7	1-3	0-0											
4HG25	1	28-10	N1	19														28-10	
SUBTOTAL	GALV.	BARS		3831	LB THIS FOUR														
STAGE 2																			
5HG13	38	23-3	N1	921														23-3	
		AVG.																AVG.	
5HG14	4	16-9	N1	70														16-8½	
5HG14	O	VARIES	FROM		22-3	TO	11-2	(2	SETS OF	2)									
5HG15	2	23-4	N1	49														23-4	
		AVG.																AVG.	
5HG16	36	19-6	N1	733														19-6¼	
5HG16	O	VARIES	FROM		18-5¼	TO	20-7	(1	SET OF	36)									
		AVG.				AVG.													
6HG17	36	20-2	1	1090	0-7¾	19-6¼					0-0			0-6					
6HG17	B	VARIES	FROM		18-5¼	TO	20-7	(1	SET OF	36)									
4HG24	12	1-10	20	15		0-0	1-3	0-7											
4HG26	1	23-0	N1	15														23-0	
SUBTOTAL	GALV.	BARS		2893	LB THIS FOUR														
STAGE 3																			
6HG6	36	11-12	1	647	0-7¾	11-3¾					0-0			0-6					
5HG13	22	23-0	N1	528														23-0	

MARK	NO.	LENGTH	TYPE	WEIGHT	A	B	C	D	E	F	G	H/H1	H2	J	K/K1	K2	L	O	R
		AVG.																AVG.	
5HG18	4	10-1	N1	42														10-0¾	
5HG18	O	VARIES	FROM		13-10¼	TO	6-3	(2	SETS OF	2)									
5HG19	2	23-6	N1	49														23-6	
		AVG.																AVG.	
5HG20	33	21-9	N1	748														21-8¾	
5HG20	O	VARIES	FROM		20-9	TO	22-8½	(1	SET OF	33)									
		AVG.				AVG.													
6HG21	33	22-5	1	1110	0-7¾	21-8¾					0-0			0-6					
6HG21	B	VARIES	FROM		20-9	TO	22-8½	(1	SET OF	33)									
5HG22	6	22-11	N1	143														22-10½	
4HG24	12	1-10	20	15		0-7	1-3	0-0											
4HG26	1	23-0	N1	15														23-0	
5HG27	22	23-10	1	547	0-7	23-3					0-0			0-5					
SUBTOTAL	GALV.	BARS		3843	LB THIS FOUR														
BEGIN SLEEPER SLAB																			
STAGE 1																			
5HG10	30	4-0	17	125		1-6	1-0	1-6											
5HG11	60	5-6	N1	344														5-6	
5HG12	16	28-10	N1	481														28-10	
4HG24	16	1-10	20	20		0-7	1-3	0-0											
4HG25	1	28-10	N1	19														28-10	
SUBTOTAL	GALV.	BARS		989	LB THIS FOUR														
STAGE 2																			
5HG10	24	4-0	17	100		1-6	1-0	1-6											
5HG11	48	5-6	N1	275														5-6	
5HG13	16	23-3	N1	388														23-3	
4HG24	12	1-10	20	15		0-7	1-3	0-0											
4HG26	1	23-0	N1	15														23-0	
SUBTOTAL	GALV.	BARS		793	LB THIS FOUR														
STAGE 3																			
5HG10	24	4-0	17	100		1-6	1-0	1-6											
5HG11	48	5-6	N1	275														5-6	
5HG13	16	23-3	N1	388														23-3	
4HG24	12	1-10	20	15		0-7	1-3	0-0											
4HG26	1	23-0	N1	15														23-0	
SUBTOTAL	GALV.	BARS		793	LB THIS FOUR														
END SLEEPER SLAB																			
STAGE 1																			
5HG10	31	4-0	17	129		1-6	1-0	1-6											
5HG11	62	5-6	N1	356														5-6	
4HG24	17	1-10	20	21		0-7	1-3	0-0											
5HG34	16	30-5	N1	508														30-5	
4HG36	1	30-5	N1	20														30-5	
SUBTOTAL	GALV.	BARS		1034	LB THIS FOUR														
STAGE 2																			

AICE
CHECKED BY:
IW / MR / VZ
DRAFTED BY:
AICE
CHECKED BY:
IW / MR / VZ
DESIGNED BY:
RWL
DESIGN SUPERVISOR:

ALTERED ON:

AFFIXED ON: 08/10/2026

SIGNATURE:
STAMP:

SIGNATURE:
STAMP:

STATE OF NEW YORK
EDWIN TWISS
080650
LICENSED PROFESSIONAL ENGINEER

IT IS A VIOLATION OF LAW FOR ANY PERSON, UNLESS THEY ARE ACTING UNDER THE DIRECTION OF A LICENSED PROFESSIONAL ENGINEER, ARCHITECT, LANDSCAPE ARCHITECT, OR LAND SURVEYOR, TO ALTER AN ITEM IN ANY WAY. IF AN ITEM BEARING THE STAMP OF A LICENSED PROFESSIONAL IS ALTERED, THE ALTERING ENGINEER, ARCHITECT, LANDSCAPE ARCHITECT, OR LAND SURVEYOR SHALL STAMP THE DOCUMENT AND INCLUDE THE NOTATION "ALTERED BY" FOLLOWED BY THEIR SIGNATURE, THE DATE OF SUCH ALTERATION, AND A SPECIFIC DESCRIPTION OF THE ALTERATION.

REVISIONS

DATE	DESCRIPTION	BY	SYM.

NEW YORK STATE | Thruway Authority

AECOM

TITLE OF PROJECT
SUPERSTRUCTURE REPLACEMENT
GSP CONNECTOR OVER NYS THRUWAY

LOCATION OF PROJECT
BIN 5514049 (MP 23.53)

TITLE OF DRAWING
BAR LIST (4 OF 5)

CONTRACT NUMBER:
TANY 26-23B

DATE:
JULY 2026

DRAWING NUMBER:
ST-67

MARK	NO.	LENGTH	TYPE	WEIGHT	A	B	C	D	E	F	G	H/H1	H2	J	K/K1	K2	L	O	R
5HG10	24	4-0	17	100		1-6	1-0	1-6											
5HG11	48	5-6	N1	275														5-6	
4HG24	12	1-10	20	15		0-7	1-3	0-0											
4HG26	1	23-0	N1	15														23-0	
5HG35	16	23-1	N1	385														23-1	
SUBTOTAL GALV. BARS				791	LB THIS FOUR														
STAGE 3																			
5HG10	24	4-0	17	100		1-6	1-0	1-6											
5HG11	48	5-6	N1	275														5-6	
4HG24	12	1-10	20	15		0-7	1-3	0-0											
4HG26	1	23-0	N1	15														23-0	
5HG35	16	23-1	N1	385														23-1	
SUBTOTAL GALV. BARS				791	LB THIS FOUR														
END APPROACH SLAB																			
STAGE 1																			
6HG6	23	11-12	1	413	0-7¾	11-3¾					0-0			0-6					
5HG7	24	4-2	17	104		0-0	2-1	2-1											
4HG24	17	1-10	20	21		0-7	1-3	0-0											
5HG30	16	30-5	N1	508														30-5	
5HG31	45	14-6	N1	681														14-6	
6HG32	45	15-2	1	1024	0-7¾	14-6					0-0			0-6					
4HG33	2	14-6	N1	19														14-6	
4HG36	1	30-5	N1	20														30-5	
5HG38	16	31-0	1	517	0-7	30-5					0-0			0-5					
SUBTOTAL GALV. BARS				3308	LB THIS FOUR														
STAGE 2																			
4HG24	12	1-10	20	15		0-7	1-3	0-0											
4HG26	1	23-0	N1	15														23-0	
5HG31	36	14-6	N1	544														14-6	
6HG32	36	15-2	1	820	0-7¾	14-6					0-0			0-6					
5HG35	32	23-4	N1	779														23-4	
SUBTOTAL GALV. BARS				2173	LB THIS FOUR														
STAGE 3																			
6HG6	23	11-12	1	413	0-7¾	11-3¾					0-0			0-6					
4HG24	12	1-10	20	15		0-7	1-3	0-0											
4HG26	1	23-0	N1	15														23-0	
5HG31	33	14-6	N1	499														14-6	
6HG32	33	15-2	1	751	0-7¾	14-6					0-0			0-6					
5HG35	16	23-4	N1	389														23-4	
5HG37	16	23-11	1	399	0-7	23-4					0-0			0-5					
SUBTOTAL GALV. BARS				2482	LB THIS FOUR														

MARK	NO.	LENGTH	TYPE	WEIGHT	A	B	C	D	E	F	G	H/H1	H2	J	K/K1	K2	L	O	R
SINGLE SLOPE CONCRETE BARRIERS																			
WEST FASCIA																			
6BG1	24	4-5	N21	158	0-0	0-0	1-0¼	1-3¼	2-1			0-11		0-0	0-10¾				
5BG2	24	5-2	S11	128								2-5						0-6	
		AVG.						AVG.				AVG.			AVG.			AVG.	
6BG3	30	4-1	12	184	0-0	0-0	3-1	1-0				0-11¾		0-0	0-1			3-2¼	
6BG3	H/H1	VARIES	FROM		1-0	TO	0-11¾	(2	SETS OF	15)									
6BG3	K/K1	VARIES	FROM		0-0	TO	0-2¼	(2	SETS OF	15)									
5BG4	418	3-4	2	1447	0-9¾	2-6					0-0								
6BG5	388	4-1	12	2377	0-0	0-0	3-1	1-0				0-11¾		0-0	0-2¼			3-3¼	
5BG6	24	5-8	S11	141								2-8						0-6	
		AVG.				AVG.	AVG.					AVG.			AVG.		AVG.		
5BG7	30	6-5	13	202		2-10½	0-9	2-9¾			0-0	0-9¾		0-0	2-10		0-3¾	3-0¾	0-3
5BG7	K/K1	VARIES	FROM		2-9¾	TO	2-10½	(2	SETS OF	15)									
5BG7	L	VARIES	FROM		0-0	TO	0-7½	(2	SETS OF	15)									
5BG8	388	6-6	13	2623		2-11¼	0-8¾	2-9¾			0-0	1-1½		0-0	2-10½		0-7½	3-0¾	0-3
7BG9	96	39-1	N1	7661														39-0½	
SUBTOTAL GALV. BARS				14922	LB THIS FOUR														
EAST FASCIA																			
6BG1	24	4-5	N21	158	0-0	0-0	1-0¼	1-3¼	2-1			0-11		0-0	0-10¾				
5BG2	24	5-2	S11	128								2-5						0-6	
		AVG.						AVG.				AVG.			AVG.			AVG.	
6BG3	30	4-1	12	184	0-0	0-0	3-1	1-0				0-11¾		0-0	0-1			3-2¼	
6BG3	H/H1	VARIES	FROM		1-0	TO	0-11¾	(2	SETS OF	15)									
6BG3	K/K1	VARIES	FROM		0-0	TO	0-2¼	(2	SETS OF	15)									
5BG4	429	3-4	2	1485	0-9¾	2-6					0-0								
6BG5	399	4-1	12	2445	0-0	0-0	3-1	1-0				0-11¾		0-0	0-2¼			3-3¼	
5BG6	24	5-8	S11	141								2-8						0-6	
		AVG.				AVG.	AVG.					AVG.			AVG.		AVG.		
5BG7	30	6-5	13	202		2-10½	0-9	2-9¾			0-0	0-9¾		0-0	2-10		0-3¾	3-0¾	0-3
5BG7	K/K1	VARIES	FROM		2-9¾	TO	2-10½	(2	SETS OF	15)									
5BG7	L	VARIES	FROM		0-0	TO	0-7½	(2	SETS OF	15)									
5BG8	399	6-6	13	2698		2-11¼	0-8¾	2-9¾			0-0	1-1½		0-0	2-10½		0-7½	3-0¾	0-3
7BG10	96	39-12	N1	7846														39-11¾	
SUBTOTAL GALV. BARS				15285	LB THIS FOUR														
MEDIAN BARRIER																			
6BG11	886	3-9	N12	4942		1-0	2-8½	0-0				0-6			2-8				
5BG12	443	7-1	N14	3254		0-0	3-4¼	0-4¼	3-4¼	0-0		3-3½	3-3½		0-7½	0-7½	0-10½	3-4¾	0-1½
5BG13	96	39-8	N1	3971														39-8	
SUBTOTAL GALV. BARS				12168	LB THIS FOUR														
TOTAL GALV. BARS				21835	LB IN ABUTMENT														
TOTAL GALV. BARS				23720	LB IN APPROACH SLAB														
TOTAL GALV. BARS				42375	LB IN BARRIER														
TOTAL GALV. BARS				3167	LB IN PIER														
TOTAL GALV. BARS				126518	LB IN SUPERSTRUCTURE														
TOTAL GALV. BARS				217615	LB ENTIRE STRUCTURE														

ALTERED ON:

AFFIXED ON: 08/10/2026

SIGNATURE:
STAMP:

SIGNATURE:
STAMP:

STATE OF NEW YORK
EDWIN TWISS
080650
LICENSED PROFESSIONAL ENGINEER

IT IS A VIOLATION OF LAW FOR ANY PERSON, UNLESS THEY ARE ACTING UNDER THE DIRECTION OF A LICENSED PROFESSIONAL ENGINEER, ARCHITECT, LANDSCAPE ARCHITECT, OR LAND SURVEYOR, TO ALTER AN ITEM IN ANY WAY. IF AN ITEM BEARING THE STAMP OF A LICENSED PROFESSIONAL IS ALTERED, THE ALTERING ENGINEER, ARCHITECT, LANDSCAPE ARCHITECT, OR LAND SURVEYOR SHALL STAMP THE DOCUMENT AND INCLUDE THE NOTATION "ALTERED BY" FOLLOWED BY THEIR SIGNATURE, THE DATE OF SUCH ALTERATION, AND A SPECIFIC DESCRIPTION OF THE ALTERATION.

REVISIONS

DATE	DESCRIPTION	BY	SYM.

NEW YORK STATE | Thruway Authority

AECOM

TITLE OF PROJECT
SUPERSTRUCTURE REPLACEMENT
GSP CONNECTOR OVER NYS THRUWAY

LOCATION OF PROJECT
BIN 5514049 (MP 23.53)

TITLE OF DRAWING
BAR LIST (5 OF 5)

CONTRACT NUMBER: TANY 26-23B

DATE: JULY 2026

DRAWING NUMBER: ST-68

AICE
CHECKED BY:
IW / MR / VZ
DRAFTED BY:
AICE
CHECKED BY:
IW / MR / VZ
DESIGNED BY:
RWL
DESIGN SUPERVISOR: